4GA & 4GB/M4GA & 4GB

3, 5 port pilot operated valve

Master valve

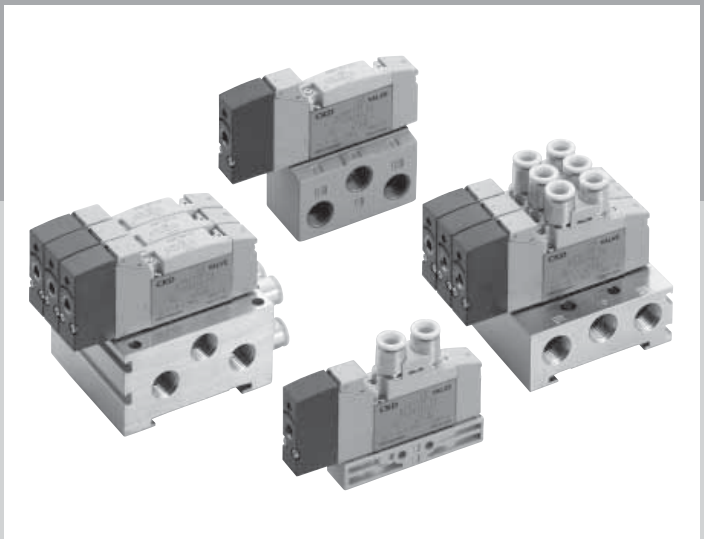

CONTENTS

Series variation 310

Discrete valve

- Body piping (3GA1 to 3 & 4GA1 to 3) 312
- Base piping (4GB1 to 3) 322

Manifold base (built-in base)

- Body piping (M4GA1 to 3) 312
- Base piping (M4GB1 to 3) 322

Manifold specifications 329

Technical data

(1) Pneumatics system selection guide 620

(2) Exhaust malfunction prevention valve 628

⚠ Safety precautions 626

Master valve
4GA & 4GB Series

Series appearance				Model no.	Position Pilot port no.JIS symbol	Valve performance: Flow characteristics C ($dm^3/(s \cdot bar)$)	Valve performance: Applicable Cylinder diameter (φ)
Discrete	4GA 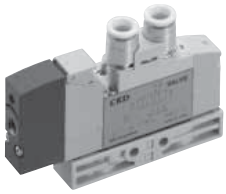	Body piping	3 port	3GA1	● 3 port valve 2-position single N.C. type 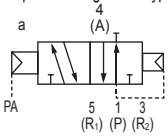	0.70	20 to 40
				3GA2		2.7	40 to 80
				3GA3		3.9	63 to 100
			5 port	4GA1	2-position single N.O. type 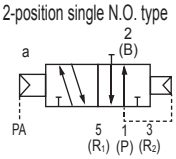	0.66 to 0.70	20 to 40
				4GA2		2.4 to 2.7	40 to 80
				4GA3		3.2 to 4.0	63 to 100
	4GB 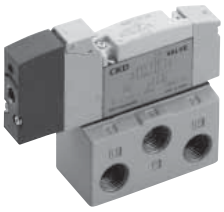	Base piping	5 port	4GB1	● 5 port valve 2-position single 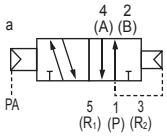	1.1 to 1.3	20 to 40
				4GB2		2.2 to 2.5	40 to 80
				4GB3		3.2 to 4.2	63 to 100
Manifold (metal base)	M4GA 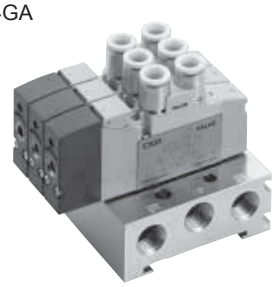	Body piping	Direct mount type	M4GA1	2-position double 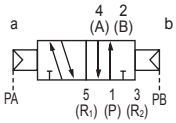	0.7 to 1.0	20 to 40
				M4GA2		1.7 to 2.5	40 to 80
				M4GA3		2.5 to 3.3	63 to 100
			DIN rail Mount type (-D)	M4GA1	3-position all ports closed 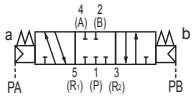	0.7 to 1.0	20 to 40
				M4GA2		1.7 to 2.5	40 to 80
				M4GA3		2.5 to 3.3	63 to 100
	M4GB 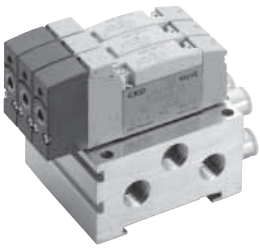	Base piping	Direct mount type	M4GB1	3-position A/B/R Connection 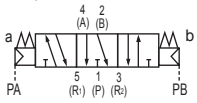	0.68 to 1.0	20 to 40
				M4GB2		1.7 to 2.4	40 to 80
				M4GB3		2.6 to 3.3	63 to 100
			DIN rail Mount type (-D)	M4GB1	3-position P/A/B connection 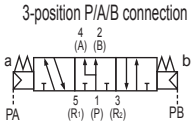	0.68 to 1.0	20 to 40
				M4GB2		1.7 to 2.4	40 to 80
				M4GB3		2.6 to 3.3	63 to 100

Note 1: Effective sectional area S and sonic conductance C are converted as S ≈ 5.0 × C.

Switching position								Connection port of A/B port												Reference page
3 port								Push-in fitting				L type push-in fitting (upward)				Female thread				
Normally closed	Normally open	Single	Double	All ports closed	ABR connection	PAB connection	Mix	φ4	φ6	φ8	φ10	φ4	φ6	φ8	φ10	M5	Rc 1/8	Rc 1/4	Rc 3/8	
								C4	C6	C8	C10	CL4	CL6	CL8	CL10	M5	06	08	10	
●	●							●	●							●				312
●	●							●	●	●							●			
●	●								●	●	●							●		
		●	●	●	●	●		●	●							●				
		●	●	●	●	●		●	●	●							●			
		●	●	●	●	●			●	●	●							●		
		●	●	●	●	●											●			322
		●	●	●	●	●												●		
		●	●	●	●	●												●	●	
●	●	●	●	●	●	●	●	●	●							●				312
								●	●	●							●			
									●	●	●							●		
●	●	●	●	●	●	●	●	●	●							●				
								●	●	●							●			
									●	●	●							●		
								●	●			●	●			●				322
		●	●	●	●	●	●	●	●	●			●	●			●			
									●	●	●			●	●			●		
								●	●			●	●			●				
		●	●	●	●	●	●	●	●	●			●	●			●			
									●	●	●			●	●			●		

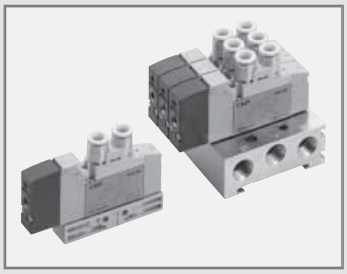

Master valve Discrete/Manifold (metal base)
Body piping

(M) 3GA1, 2, 3 / (M) 4GA1, 2, 3 Series

● Applicable cylinder bore size: φ20 to φ100

RoHS CAD

Common specifications

Descriptions		
Valve type and operation method		Pilot-operated soft spool valve
Working fluid		Compressed air
Max. working pressure	MPa	0.7
Min. working pressure Note 1	MPa	Refer to main pressure section in the table below
Proof pressure	MPa	1.05
Ambient temperature	°C	-5 to 55 (no freezing)
Fluid temperature	°C	5 to 55
Manual operating device		Non-locking/locking common type
Pilot exhaust method (at the time of manual operation)		Main valve/pilot valve common exhaust type
Lubrication	Note 2	Not required
Degree of protection	Note 3	Dust proof
Vibration resistance	m/s^2	50 or less
Shock resistance	m/s^2	300 or less
Atmosphere		Containing corrosive gas is not permissible

Note 1 When performing manual operation, the supply pressure to the P port as shown in the table below is required.
2-position 0.1 MPa and over
3-position 0.2 MPa and over
Note 2 Use the turbine oil Class 1 ISO VG32 if lubricated. Excessive or intermittent lubrication results in unstable operation.
Note 3 Check that water drops or oil, etc., do not come into contact.

Individual specifications

Body piping (discrete/manifold)

No. of ports	Model no. Discrete	Model no. Manifold	Valve Position	Pilot port PA/PB	Main pressure	Pilot signal pressure MPa	Other specifications reference page Note
3 port	3GA1**1R	M3GA1**1R	2-position single N.C./N.O.	M5	0.2 to 0.7	(0.6 × main pressure + 0.06) to 0.7	Discrete: Page 6 Manifold: Page 90
	3GA2**1R	M3GA2**1R					
	3GA3**1R	M3GA3**1R					
5 port	4GA111R	M4GA111R	2-position single	M5	0.2 to 0.7	(0.6 × main pressure + 0.06) to 0.7	
	4GA121R	M4GA121R	2-position double		0 to 0.7	0.2 to 0.7	
	4GA1$^{3}_{4}_{5}$1R	M4GA1$^{3}_{4}_{5}$1R	3-position				
	4GA211R	M4GA211R	2-position single	M5	0.2 to 0.7	(0.6 × main pressure + 0.06) to 0.7	
	4GA221R	M4GA221R	2-position double		0 to 0.7	0.2 to 0.7	
	4GA2$^{3}_{4}_{5}$1R	M4GA2$^{3}_{4}_{5}$1R	3-position				
	4GA311R	M4GA311R	2-position single	M5	0.2 to 0.7	(0.6 × main pressure + 0.06) to 0.7	
	4GA321R	M4GA321R	2-position double		0 to 0.7	0.2 to 0.7	
	4GA3$^{3}_{4}_{5}$1R	M4GA3$^{3}_{4}_{5}$1R	3-position				

Note: Other specifications are the same as those of 4G Series. Refer to pages for each specifications.

How to order

Discrete master valve

4GA2 1 1R - C4 - H

- 4GA2: Ⓐ Model no.
- 1: Ⓑ Valve Position
- C4: Ⓒ Port size
- H: Ⓓ Option

(3)

Symbol	Descriptions		Ⓐ Model no. 3GA1	3GA2	3GA3	4GA1	4GA2	4GA3
Ⓑ Valve Position								
1	2-position single					●	●	●
2	2-position double					●	●	●
3	3-position all ports closed					●	●	●
4	3-position ABR connection					●	●	●
5	3-position PAB connection					●	●	●
1	2-position single normally closed	Note1	●	●	●			
11	2-position single normally open	Note1	●	●	●			

Ⓒ Port size							
Port	A/B Port	P/R1/R2 Port (1) = M5 (2) = Rc1/8 (3) = Rc1/4					
C4	φ4 push-in fitting	(1)	(2)		(1)	(2)	
C6	φ6 push-in fitting	(1)	(2)	(3)	(1)	(2)	(3)
C8	φ8 push-in fitting		(2)	(3)		(2)	(3)
C10	φ10 push-in fitting			(3)			(3)
M5	M5	(1)			(1)		
06	Rc 1/8		(2)			(2)	
08	Rc 1/4			(3)			(3)

Ⓓ Option								
Blank	None		●	●	●	●	●	●
H	With malfunction prevention valve	Note 2	●	●	●	●	●	●
P	Mounting plate	Note 3	●	●	●	●	●	●
A	Ozone/cutting oil proof		●	●	●	●	●	●
F	A/B port filter integrated	Note 4	●	●	●	●	●	●

is not available.

Note on model no. selection

Note 1 For 3GA normally closed type, the piping connection 2 (B) and 3 (R2) ports are plugged. For 3GA normally open type, avoid plugging 5 (R1) port. Not doing so could cause malfunctions.
Note 2 3-position all ports closed and PAB connection are not provided with malfunction prevention valve (H). Refer to page 628 for details on malfunction prevention valve.
Note 3 For option symbol P, unless single is designated normal, mounting is not possible because of pilot port orientation.
Note 4 The P port has a filter built inside as a standard.

Manifold

M 4GA2 1 1R - C4 - H D - 8

Discrete master valve for manifold (gasket, set screw, PR check valve attached)

4GA2 1 8R - C4 - H

- 4GA2: Ⓐ Model no.
- 1: Ⓑ Valve Position
- C4: Ⓒ Port size
- H: Ⓓ Option
- D: Ⓔ Mount type
- 8: Ⓕ Station no.

Symbol	Descriptions		Ⓐ Model no. M3GA1	M3GA2	M3GA3	M4GA1	M4GA2	M4GA3
Ⓑ Valve Position								
1	2-position single					●	●	●
2	2-position double					●	●	●
3	3-position all ports closed					●	●	●
4	3-position ABR connection					●	●	●
5	3-position PAB connection					●	●	●
1	2 position single, normally closed		●	●	●			
11	2 position single, normally open		●	●	●			
8	Mix manifold (In case of multiple Valve Positions)		●	●	●	●	●	●

Ⓒ Port size								
Port	A/B port	P/R1/R2 Port (2) = Rc1/8 (3) = Rc1/4 (4) = Rc3/8						
C4	φ4 push-in fitting		(2)	(3)		(2)	(3)	
C6	φ6 push-in fitting		(2)	(3)	(4)	(2)	(3)	(4)
C8	φ8 push-in fitting			(3)	(4)		(3)	(4)
C10	φ10 push-in fitting				(4)			(4)
CX	Push-in fitting mix	Note 1	(2)	(3)	(4)	(2)	(3)	(4)
M5	M5		(2)			(2)		
06	Rc 1/8			(3)			(3)	
08	Rc 1/4				(4)			(4)

Ⓓ Option								
Blank	None		●	●	●	●	●	●
H	With malfunction prevention valve	Note 2	●	●	●	●	●	●
A	Ozone/cutting oil proof		●	●	●	●	●	●
F	A/B port filter integrated	Note 3	●	●	●	●	●	●
Z1	Air supply spacer	Note 4, Note 5	●	●	●	●	●	●
Z2	In stop valve spacer	Note 4, Note 5	●	●	●	●	●	●
Z3	Exhaust spacer	Note 4, Note 5	●	●	●	●	●	●

Ⓔ Mount type							
Blank	Direct mount type	●	●	●	●	●	●
D	DIN rail mount type	●	●	●	●	●	●

Ⓕ Station no.							
2	2 stations	●	●	●	●	●	●
to	to						
20	Refer to page 90 for the max. station no. for each model						

is not available.

Note on model no. selection

Note 1 The push-in fitting cannot be mixed with the discrete valve's 4 (A) or 2 (B) port.
Note 2 3-position all ports closed and PAB connection are not provided with malfunction prevention valve (H). Refer to page 628 for details on malfunction prevention valve.
Note 3 The P port has a filter built inside as a standard.
Note 4 Specify the spacer mounting location and quantity in manifold specifications. Stacking multiple spacers is not supported. Combination with the masking plate is not supported. Refer to page 180 to 184 for details.
Note 5 Cannot be selected for discrete master valves for manifolds.

Dimensions CAD

3GA111R

● 2-position single N.C. type

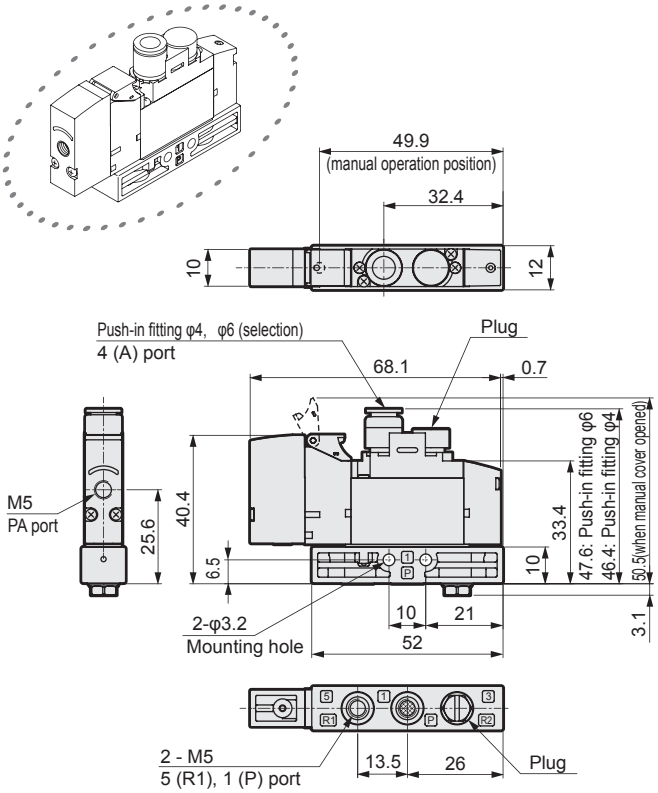

3GA1111R

● 2-position single N.O. type

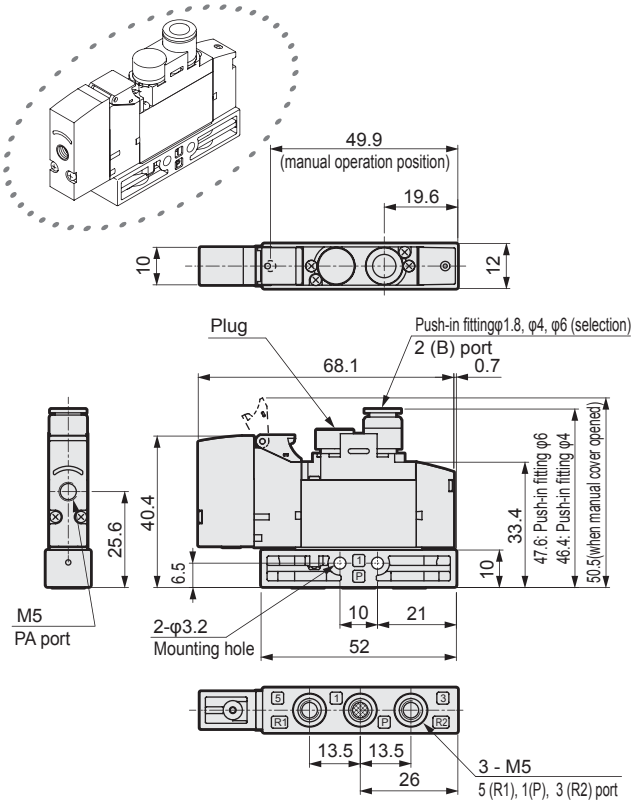

* The mounting plate (P) is the same as that of solenoid valve. Refer to pages 16 and 18 for dimensions.

3GA211R

● 2-position single N.C. type

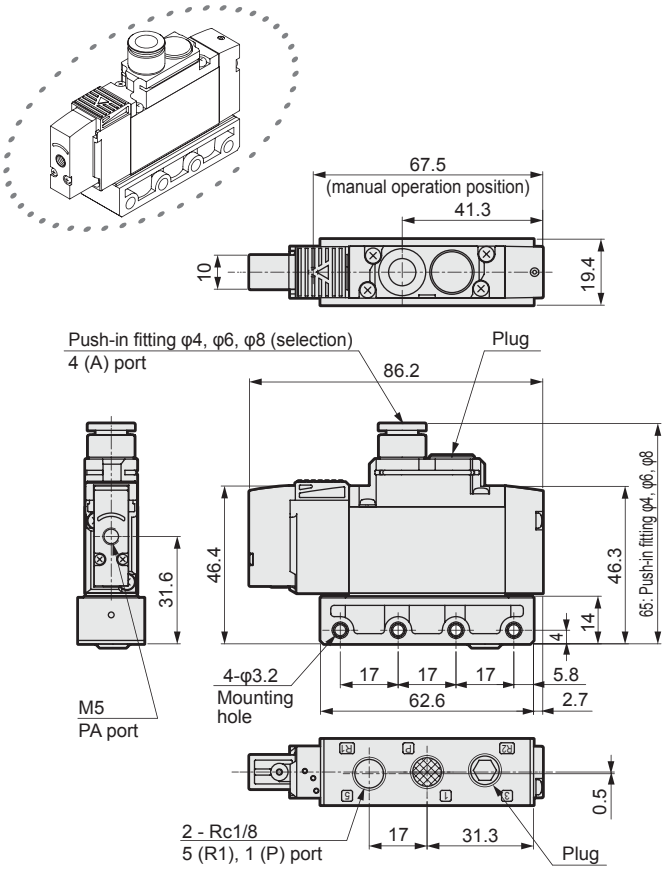

3GA2111R

● 2-position single N.O. type

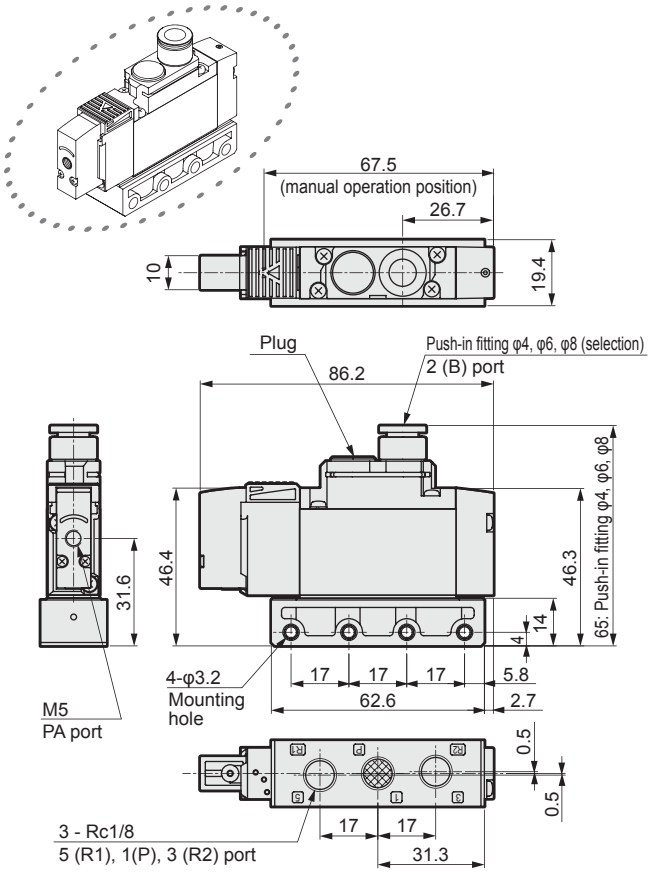

* The mounting plate (P) is the same as that of solenoid valve. Refer to pages 20 and 22 for dimensions.

Dimensions CAD

3GA311R

● 2-position single N.C. type

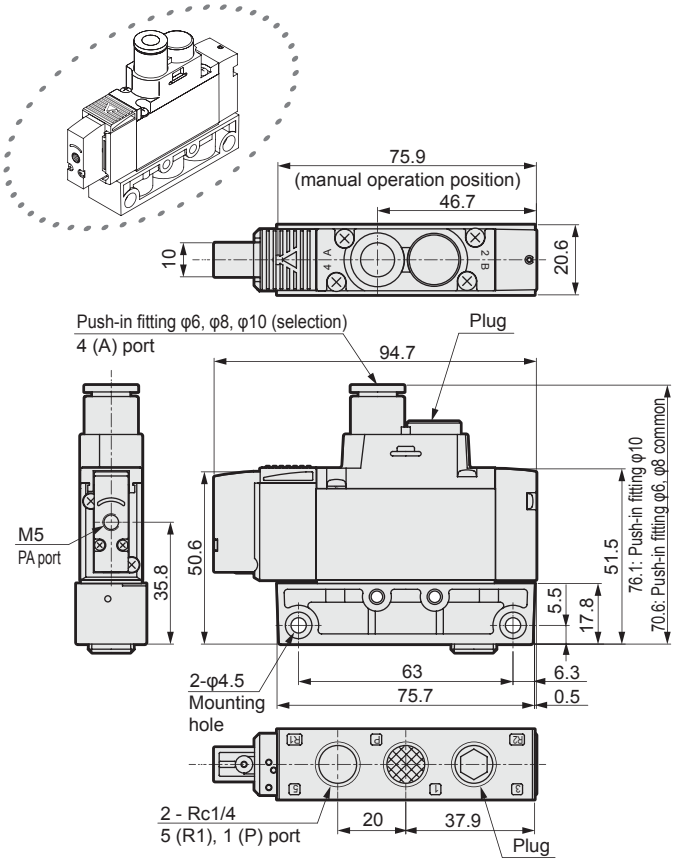

3GA3111R

● 2-position single N.O. type

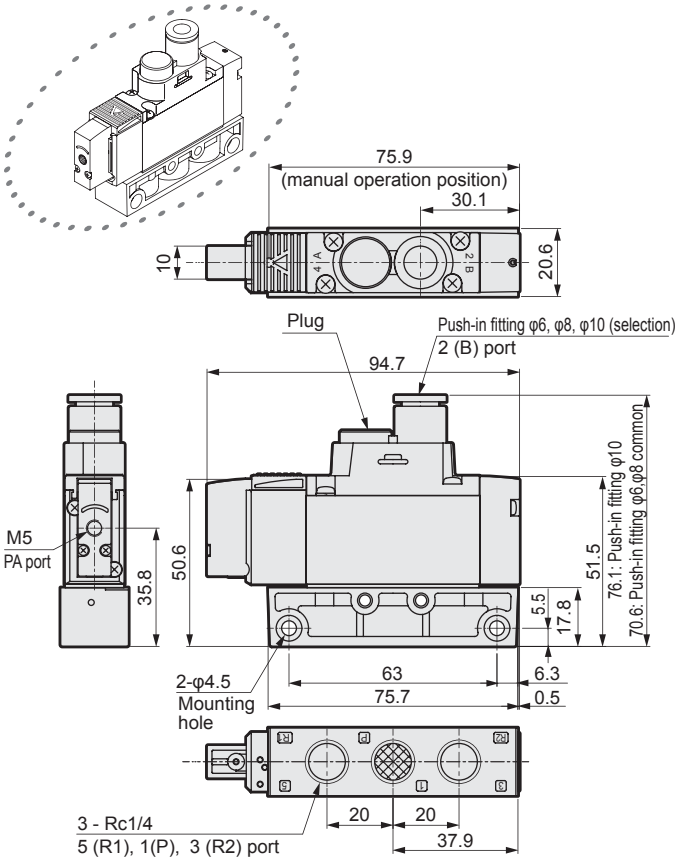

* The mounting plate (P) is the same as that of solenoid valve. Refer to pages 24 and 26 for dimensions.

Dimensions CAD

4GA111R

● 2-position single

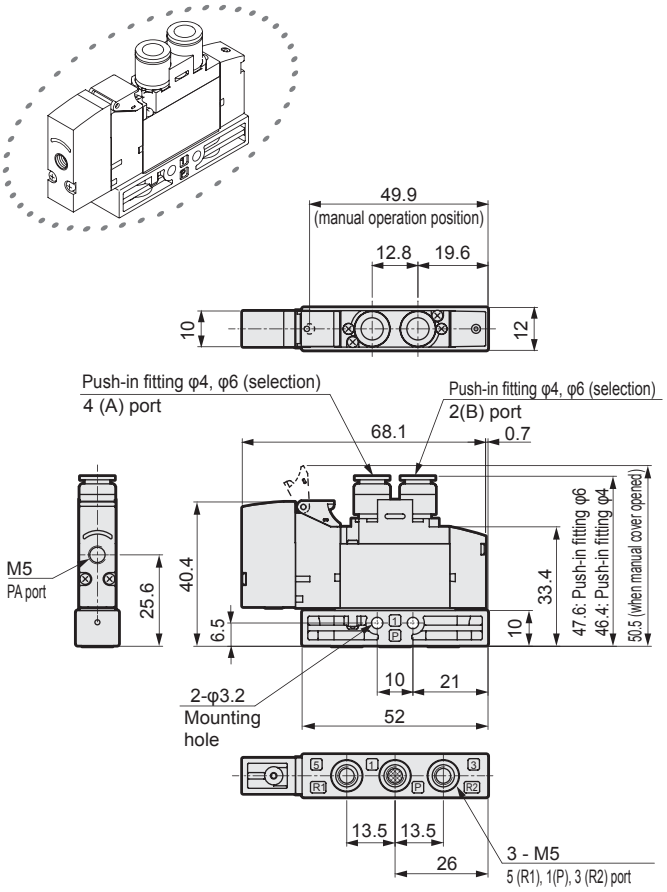

4GA121R

● 2-position double

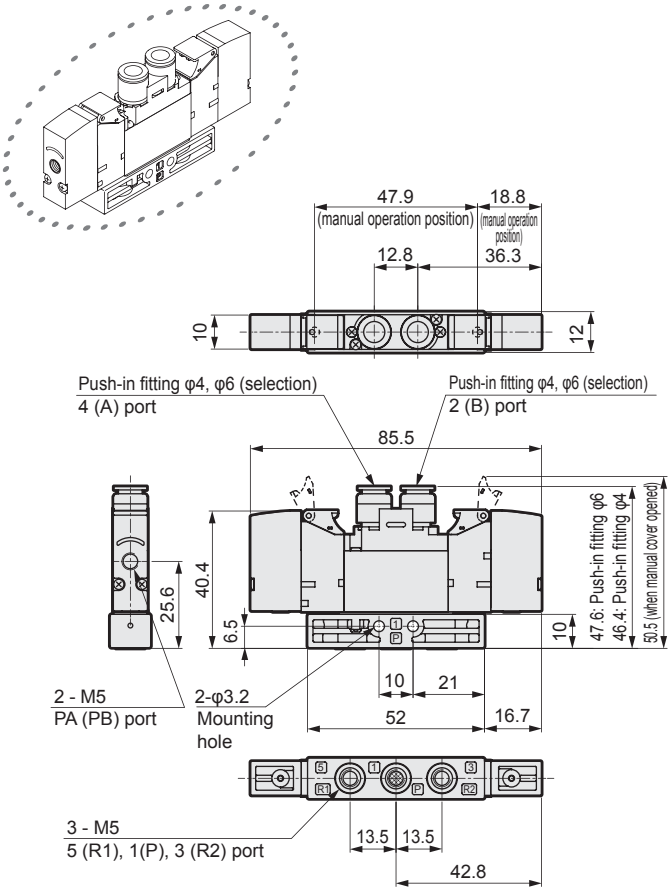

4GA1$^{3}_{4}_{5}$1R

● 3-position

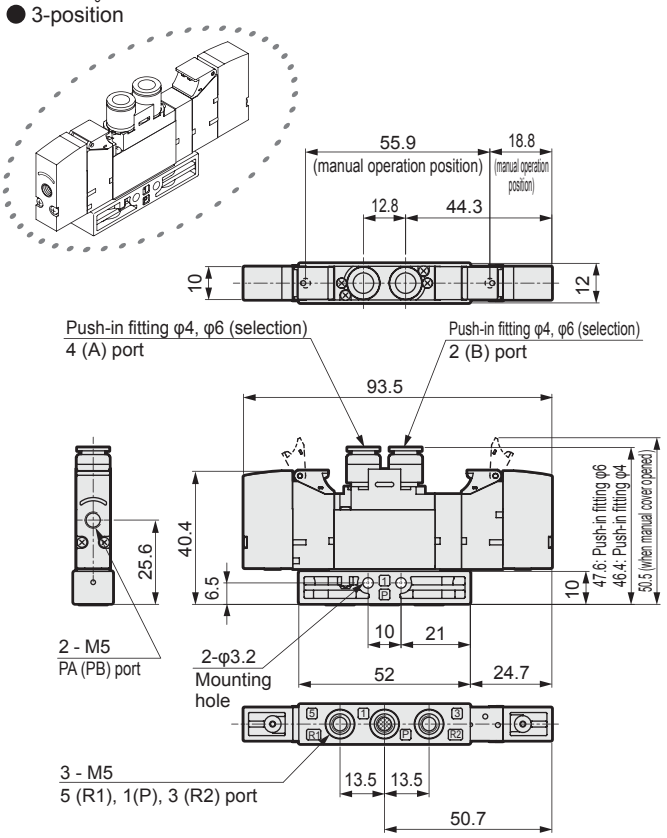

* The mounting plate (P) is the same as that of solenoid valve.
Refer to pages 28, 30 and 32 for dimensions.

Dimensions

4GA211R

● 2-position single

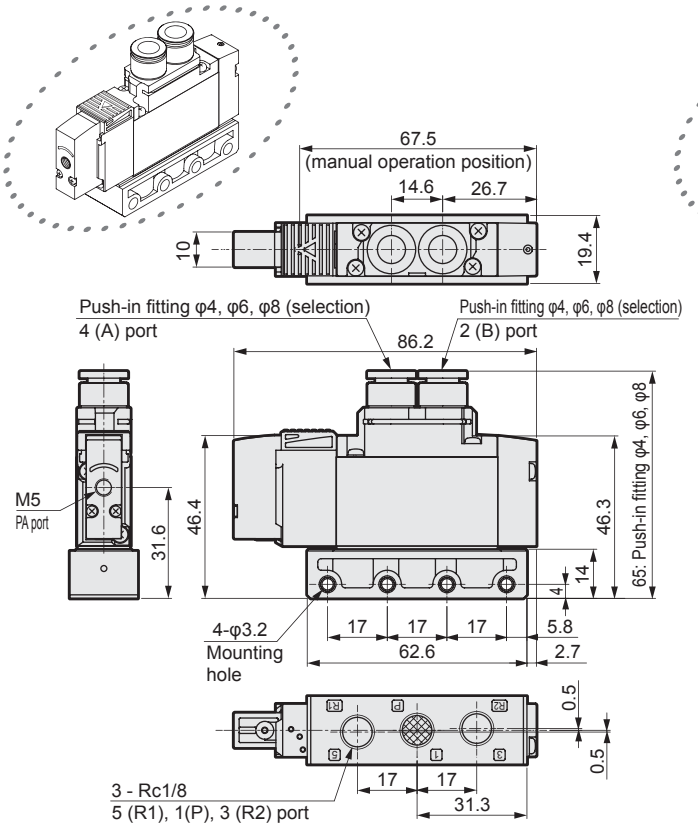

4GA221R

● 2-position double

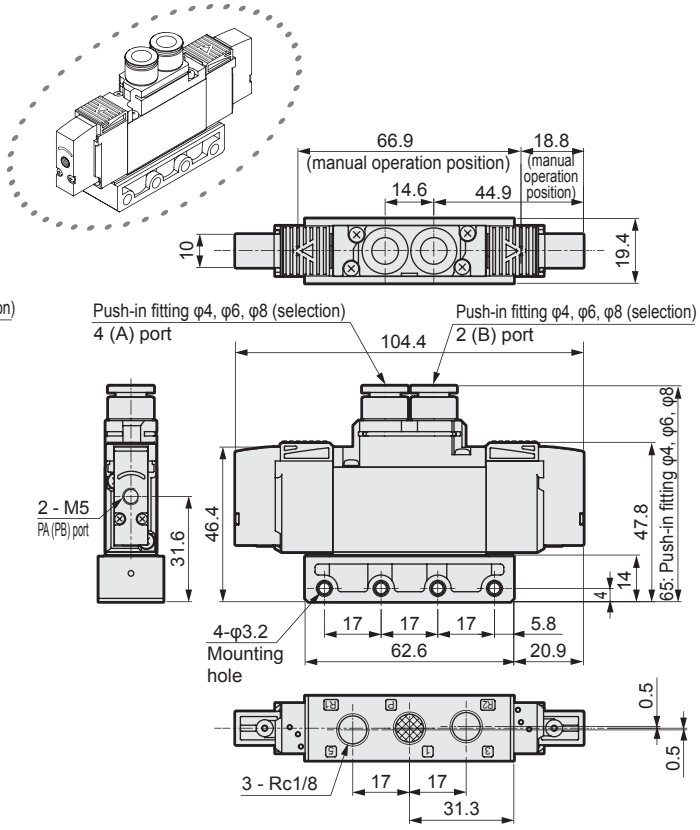

4GA2 3/4/5 1R

● 3-position

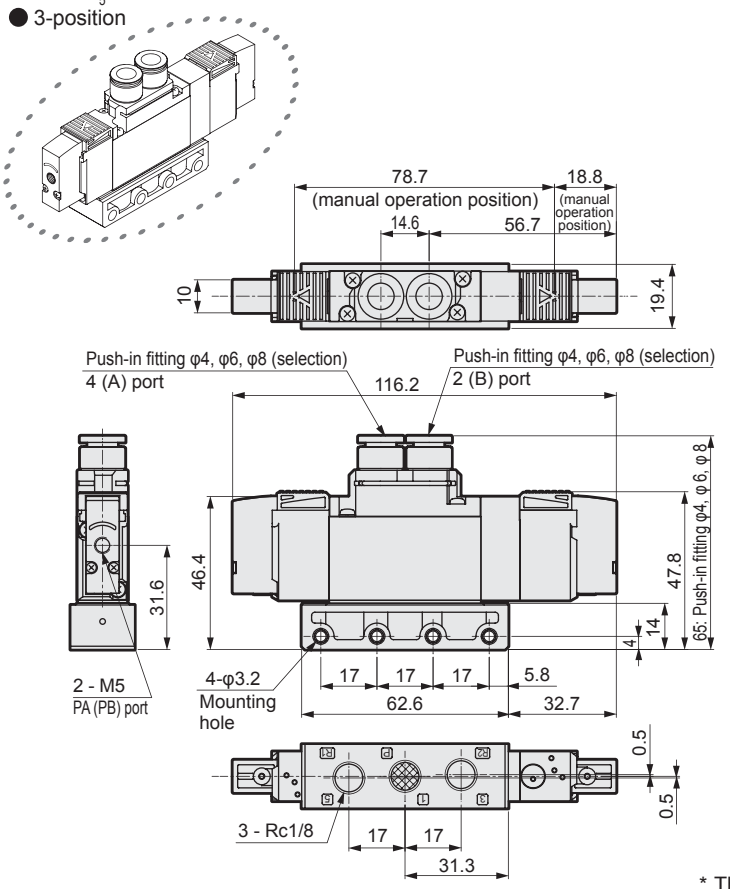

* The mounting plate (P) is the same as that of solenoid valve.
Refer to pages 34, 36 and 38 for dimensions.

Dimensions CAD

4GA311R

● 2-position single

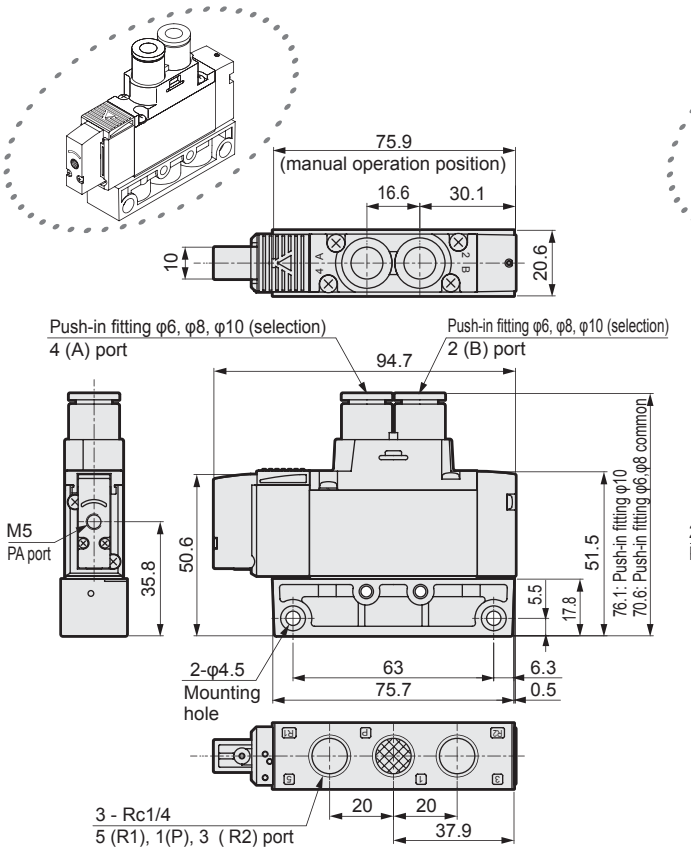

4GA321R

● 2-position double

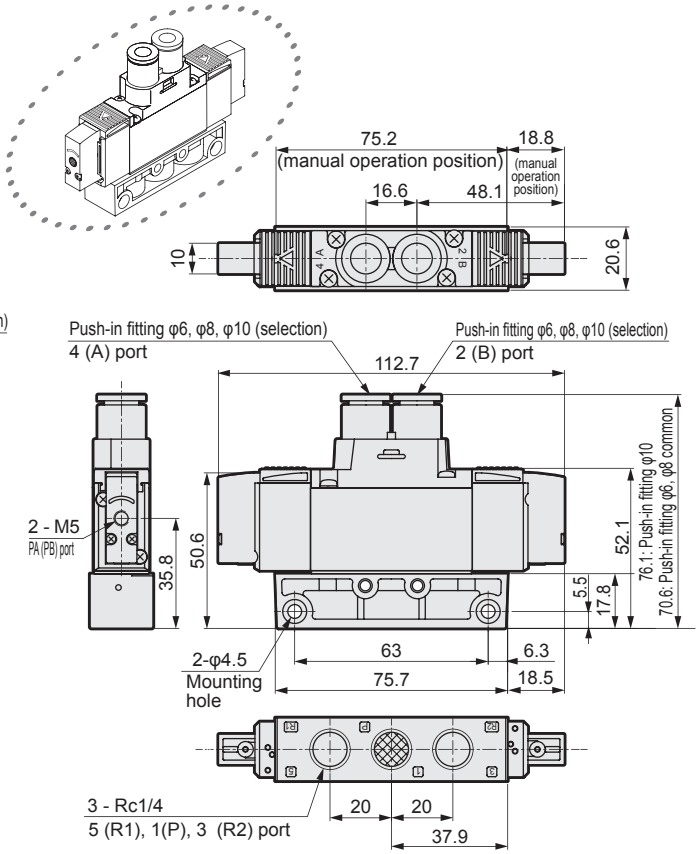

4GA3$^{3}_{4}_{5}$1R

● 3-position

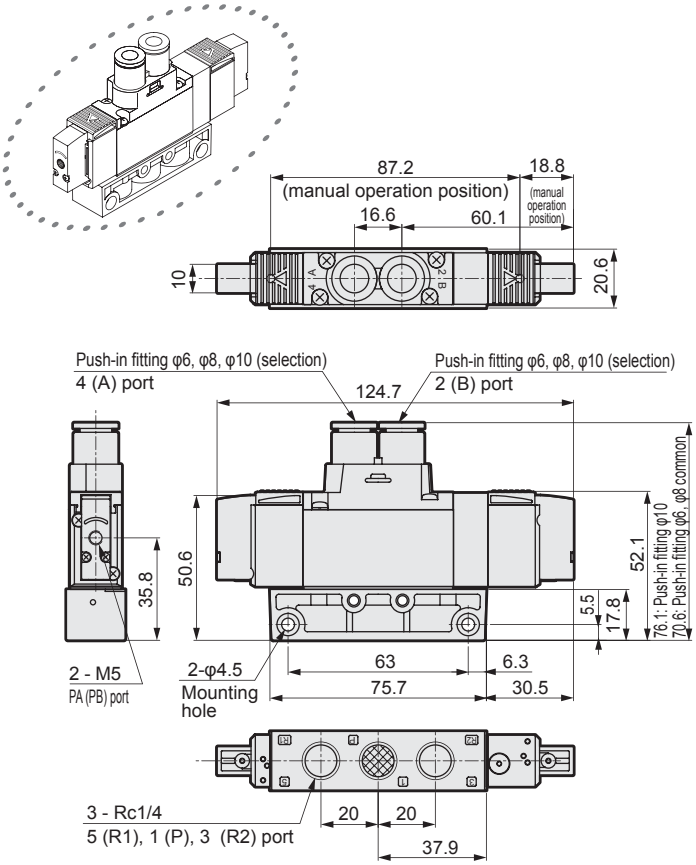

* The mounting plate (P) is the same as that of solenoid valve. Refer to pages 40, 42 and 44 for dimensions.

Dimensions

M4GA1

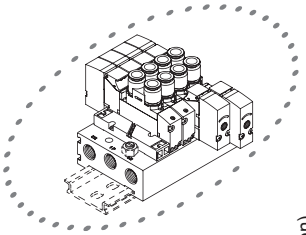

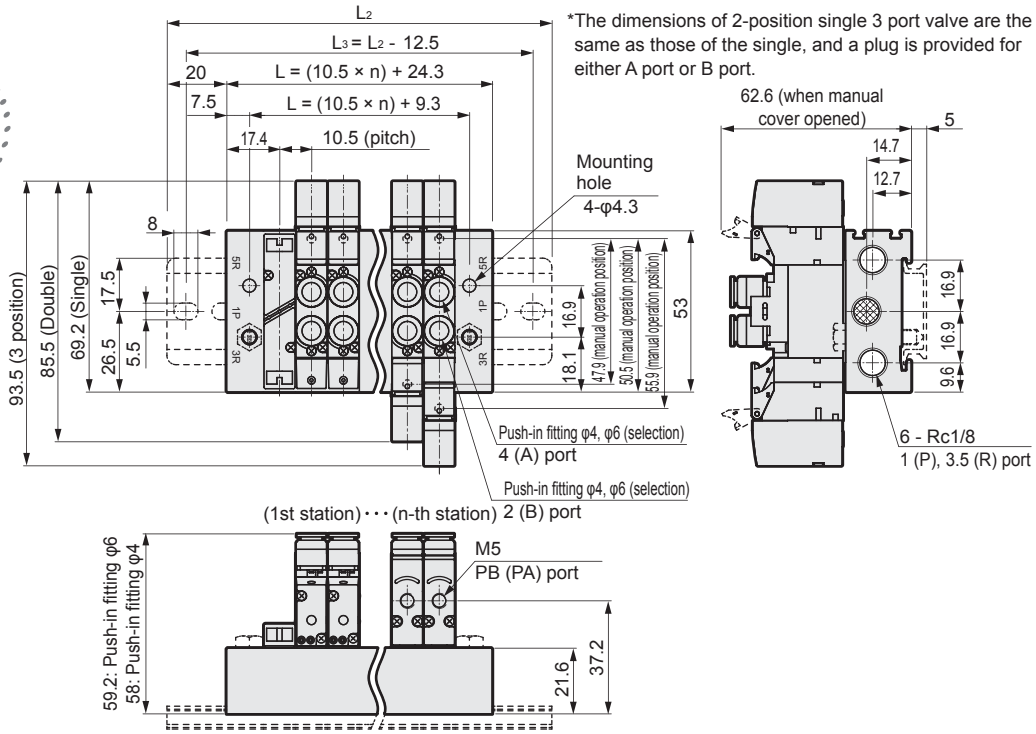

*The dimensions of 2-position single 3 port valve are the same as those of the single, and a plug is provided for either A port or B port.

Station no.	2	3	4	5	6	7	8	9	10	11	12	13	14	15	16	17	18	19	20
L	45.3	55.8	66.3	76.8	87.3	97.8	108.3	118.8	129.3	139.8	150.3	160.8	171.3	181.8	192.3	202.8	213.3	223.8	234.3
L_1	30.3	40.8	51.3	61.8	72.3	82.8	93.3	103.8	114.3	124.8	135.3	145.8	156.3	166.8	177.3	187.8	198.3	208.8	219.3
L_2	87.5	100.0	112.5	125.0	137.5	150.0	150.0	162.5	175.0	187.5	200.0	212.5	212.5	225.0	237.5				
L_3	75.0	87.5	100.0	112.5	125.0	137.5	137.5	150.0	162.5	175.0	187.5	200.0	200.0	212.5	225.0				

M4GA2

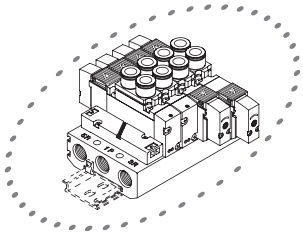

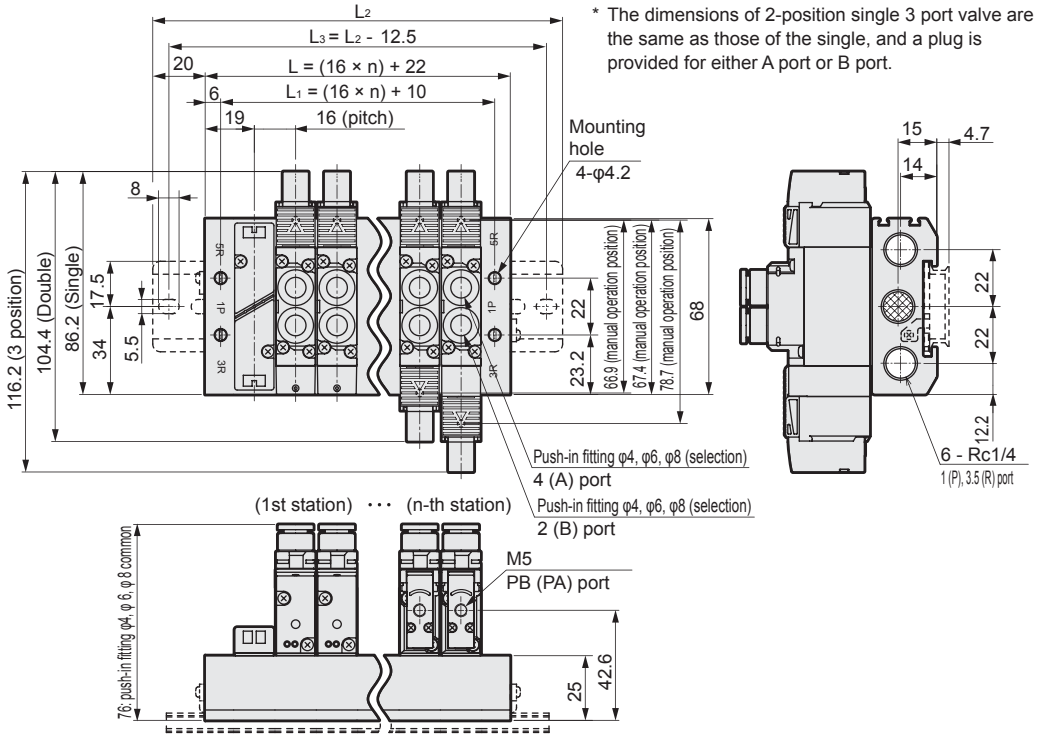

* The dimensions of 2-position single 3 port valve are the same as those of the single, and a plug is provided for either A port or B port.

Station no.	2	3	4	5	6	7	8	9	10	11	12	13	14	15	16	17	18	19	20
L	54.0	70.0	86.0	102.0	118.0	134.0	150.0	166.0	182.0	198.0	214.0	230.0	246.0	262.0	278.0	294.0	310.0	326.0	342.0
L_1	42.0	58.0	74.0	90.0	106.0	122.0	138.0	154.0	170.0	186.0	202.0	218.0	234.0	250.0	266.0	282.0	298.0	314.0	330.0
L_2	100.0	112.5	137.5	150.0	162.5	175.0	200.0	212.5	225.0	250.0	262.5	275.0	287.5	312.5	325.0				
L_3	87.5	100.0	125.0	137.5	150.0	162.5	187.5	200.0	212.5	237.5	250.0	262.5	275.0	300.0	312.5				

Dimensions

M4GA3

* The dimensions of 2-position single 3 port valve are the same as those of the single, and a plug is provided for either A port or B port.

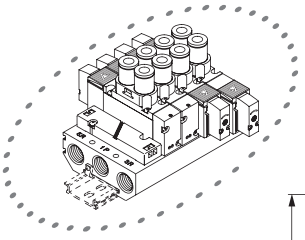

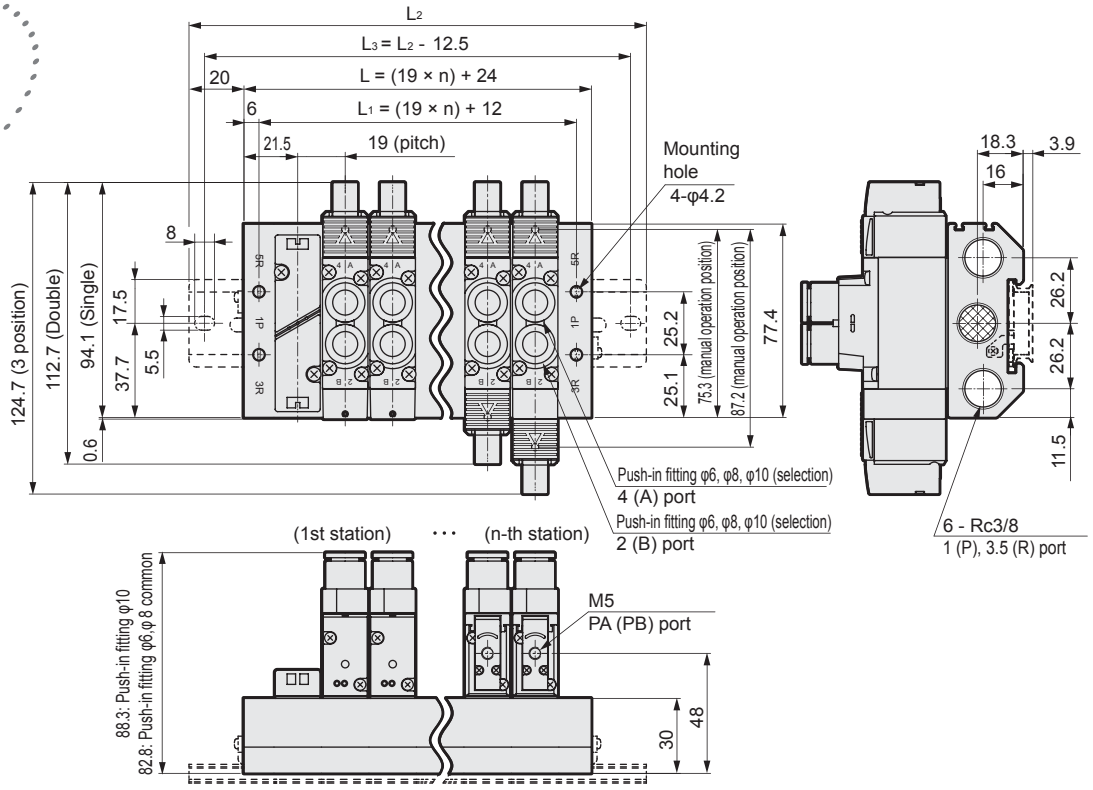

Station no.	2	3	4	5	6	7	8	9	10	11	12	13	14	15	16	17	18	19	20
L	62.0	81.0	100.0	119.0	138.0	157.0	176.0	195.0	214.0	233.0	252.0	271.0	290.0	309.0	328.0	347.0	366.0	385.0	404.0
L_1	50.0	69.0	88.0	107.0	126.0	145.0	164.0	183.0	202.0	221.0	240.0	259.0	278.0	297.0	316.0	335.0	354.0	373.0	392.0
L_2	112.5	125.0	150.0	162.5	187.5	200.0	225.0	237.5	262.5	275.0	300.0	312.5	337.5	350.0	375.0				
L_3	100.0	112.5	137.5	150.0	175.0	189.5	212.5	225.0	250.0	262.5	287.5	300.0	325.0	337.5	362.5				

MEMO

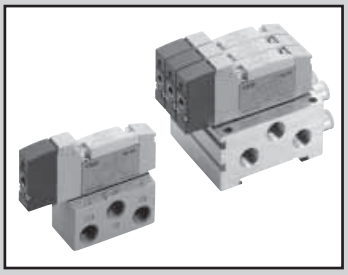

Master valve Discrete/Manifold (metal base)
Base piping

(M)4GB1/2/3 Series

● Applicable cylinder bore size: φ20 to φ100

RoHS CAD

Common specifications

Descriptions	
Valve type and operation method	Pilot-operated soft spool valve
Working fluid	Compressed air
Max. working pressure MPa	0.7
Min. working pressure Note 1 MPa	Refer to main pressure section in the table below
Proof pressure MPa	1.05
Ambient temperature °C	-5 to 55 (no freezing)
Fluid temperature °C	5 to 55
Manual operating device	Non-locking/locking common type
Pilot exhaust method (at the time of manual operation)	Main valve/pilot valve common exhaust type
Lubrication Note 2	Not required
Degree of protection Note 3	Dust proof
Vibration resistance m/s^2	50 or less
Shock resistance m/s^2	300 or less
Atmosphere	Containing corrosive gas is not permissible

Note 1 When performing manual operation, the supply pressure to the P port as shown in the table below is required.
2-position 0.1 MPa and over
3-position 0.2 MPa and over
Note 2 Use the turbine oil Class 1 ISO VG32 if lubricated. Excessive or intermittent lubrication results in unstable operation.
Note 3 Check that water drops or oil, etc., do not come into contact.

Individual specifications

Base piping (discrete/manifold)

No. of ports	Model no.		Valve Position	Pilot port PA/PB	Main pressure	Pilot signal pressure MPa	Others reference page Note
	Discrete component	Manifold					
5 port	4GB111R	M4GB111R	2-position single	M5	0.2 to 0.7	(0.6 × main pressure + 0.06) to 0.7	Discrete: Page 54 Manifold: Page 106
	4GB121R	M4GB121R	2-position double		0 to 0.7	0.2 to 0.7	
	4GB1$^{3}_{4}_{5}$1R	M4GB1$^{3}_{4}_{5}$1R	3-position				
	4GB211R	M4GB211R	2-position single	M5	0.2 to 0.7	(0.6 × main pressure + 0.06) to 0.7	
	4GB221R	M4GB221R	2-position double		0 to 0.7	0.2 to 0.7	
	4GB2$^{3}_{4}_{5}$1R	M4GB2$^{3}_{4}_{5}$1R	3-position				
	4GB311R	M4GB311R	2-position single	M5	0.2 to 0.7	(0.6 × main pressure + 0.06) to 0.7	
	4GB321R	M4GB321R	2-position double		0 to 0.7	0.2 to 0.7	
	4GB3$^{3}_{4}_{5}$1R	M4GB3$^{3}_{4}_{5}$1R	3-position				

Note Other specifications are the same as those of 4G Series. Refer to pages for each specifications.

How to order

Discrete master valve

4GB2 1 1R - 08 - H

- Ⓑ Valve Position
- Ⓐ Model no.
- Ⓓ Option
- Ⓒ Port size

Symbol	Descriptions	Ⓐ Model No. =4GB1	4GB2	4GB3
Ⓑ Valve Position				
1	2-position single	●	●	●
2	2-position double	●	●	●
3	3-position all ports closed	●	●	●
4	3-position ABR connection	●	●	●
5	3-position PAB connection	●	●	●
Ⓒ Port size				
Port	A/B port	P/R1/R2 port (2) = Rc1/8 (3) = Rc1/4 (4) = Rc3/8		
06	Rc1/8	(2)		
08	Rc1/4		(3)	(3)
10	Rc3/8			(4)
Ⓓ Option				
Blank	None	●	●	●
H	With malfunction prevention valve Note 1	●	●	●
A	Ozone/cutting oil proof	●	●	●
F	A/B port filter integrated Note 2	●	●	●

is not available.

⚠ Note on model no. selection

Note 1 3-position all ports closed and PAB connection are not provided with check valve (H). Refer to page 628 for details on malfunction prevention valve.

Note2 The P port has a filter built inside as a standard.

Manifold

M 4GB2 1 1R - C4 - H D - 8

Discrete master valve for manifold (gasket, set screw, PR check valve attached)

4GB2 1 8R - 00 - H

- Ⓑ Valve Position
- Ⓐ Model no.
- Ⓒ Port size
- Ⓓ Option
- Ⓔ Mount type
- Ⓕ Station no.

Symbol	Descriptions	Ⓐ Model No. M4GB1	M4GB2	M4GB3
Ⓑ Valve Position				
1	2-position single	●	●	●
2	2-position double	●	●	●
3	3-position all ports closed	●	●	●
4	3-position ABR connection	●	●	●
5	3-position PAB connection	●	●	●
8	Mix manifold (In case of multiple Valve Positions)	●	●	●
Ⓒ Port size				
Port	A/B port	P/R1/R2 port (2) = Rc1/8 (3) = Rc1/4 ④= Rc3/8		
C4	φ4 push-in fitting	(2)	(3)	
C6	φ6 push-in fitting	(2)	(3)	(4)
C8	φ8 push-in fitting		(3)	(4)
C10	φ10 push-in fitting			(4)
CL4	L type φ4 push-in fitting (upward) Note 1	(2)		
CL6	L type φ6 push-in fitting (upward) Note 1	(2)	(3)	
CL8	L type φ8 push-in fitting (upward) Note 1		(3)	(4)
CL10	L type φ10 push-in fitting (upward) Note 1			(4)
CX	Push-in fitting mix	(2)	(3)	(4)
M5	M5	(2)		
06	Rc1/8		(3)	
08	Rc1/4			(4)
Ⓓ Option				
Blank	None	●	●	●
H	With malfunction prevention valve Note 2	●	●	●
A	Ozone/cutting oil proof	●	●	●
F	A/B port filter integrated Note 3	●	●	●
Z1	Air supply spacer Note 4, Note 5	●	●	●
Z2	In stop valve spacer Note 4, Note 5		●	●
Z3	Exhaust spacer Note 4, Note 5	●	●	●
Ⓔ Mount type				
Blank	Direct mount type	●	●	●
D	DIN rail mount type	●	●	●
Ⓕ Station no.				
2	2 stations	●	●	●
to	to			
20	Refer to page 106 for the max. station no. for each model.			

is not available.

⚠ Note on model no. selection

Note 1 CL* push-in fitting L type (upward) is available only for the 2-position single manifold. The port A is a long elbow and the port B is short elbow.

Note 2 3-position all ports closed and PAB connection are not provided with malfunction prevention valve (H). Refer to page 628 for details on malfunction prevention valve.

Note3 The P port has a filter built inside as a standard.

Note 4 Specify the spacer mounting position and quantity in manifold specifications. Stacking multiple spacers is not supported. Combination with the masking plate is not supported. Refer to page 180 to 184 for details.

Note 5 Cannot be selected for discrete master valves for manifolds.

Dimensions CAD

4GB111R

● 2-position single

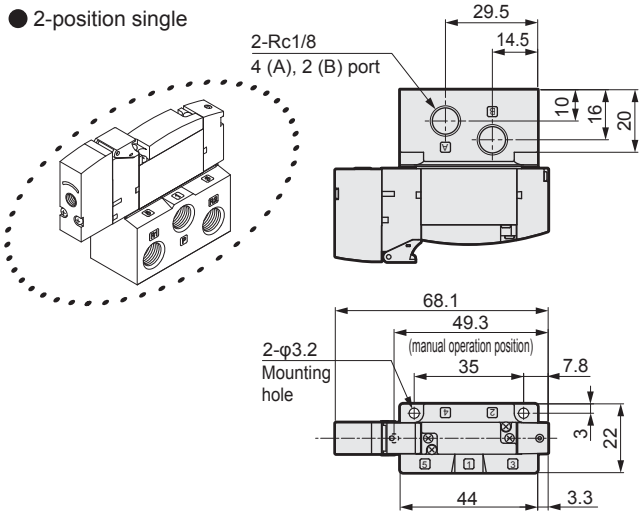

4GB121R

● 2-position double

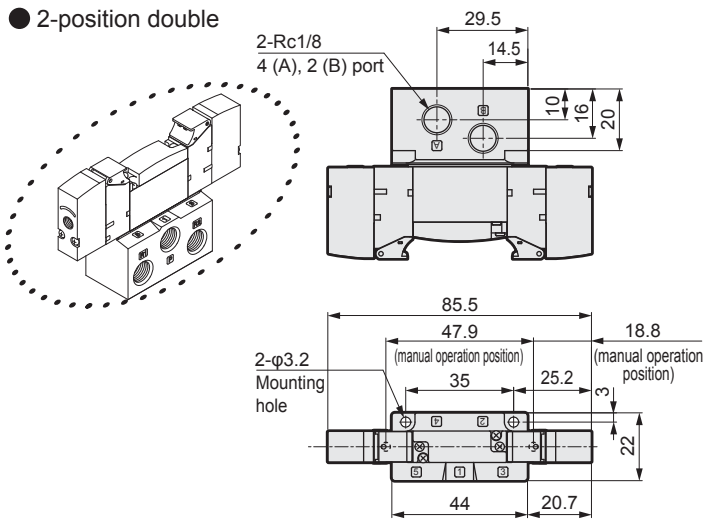

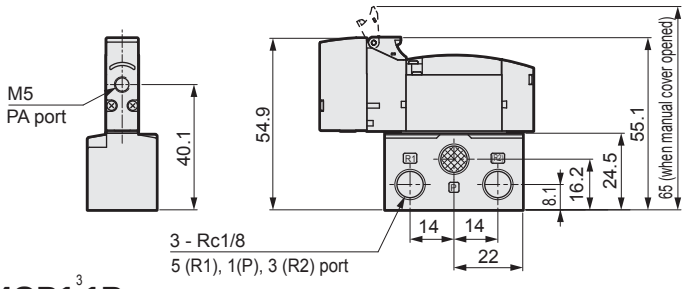

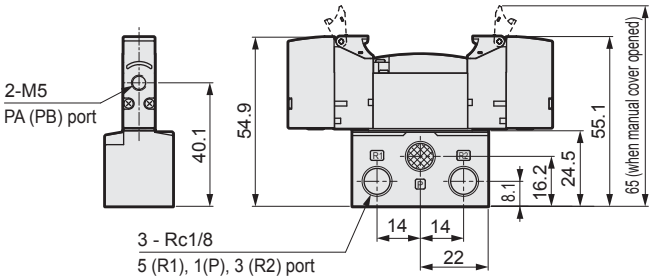

4GB1$^{3}_{4}_{5}$1R

● 3-position

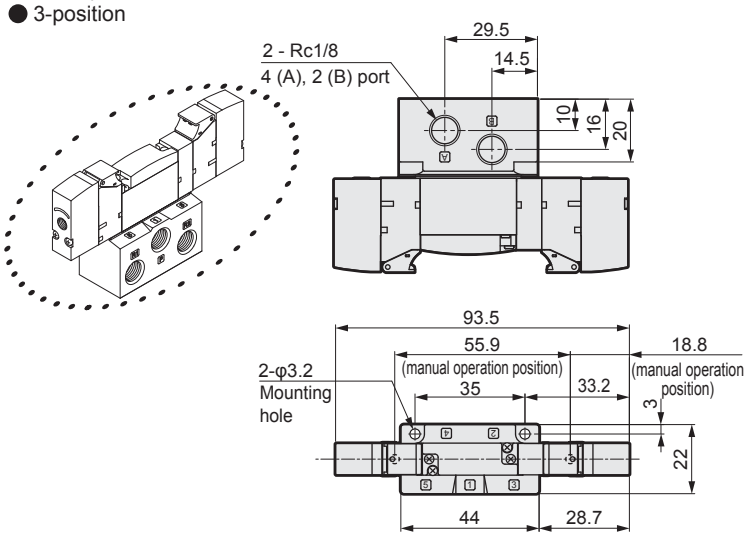

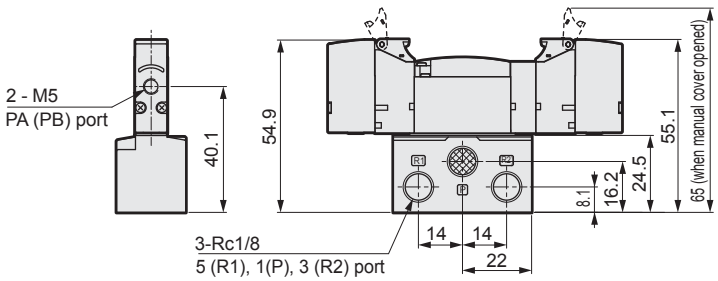

Dimensions CAD

4GB211R

● 2-position single

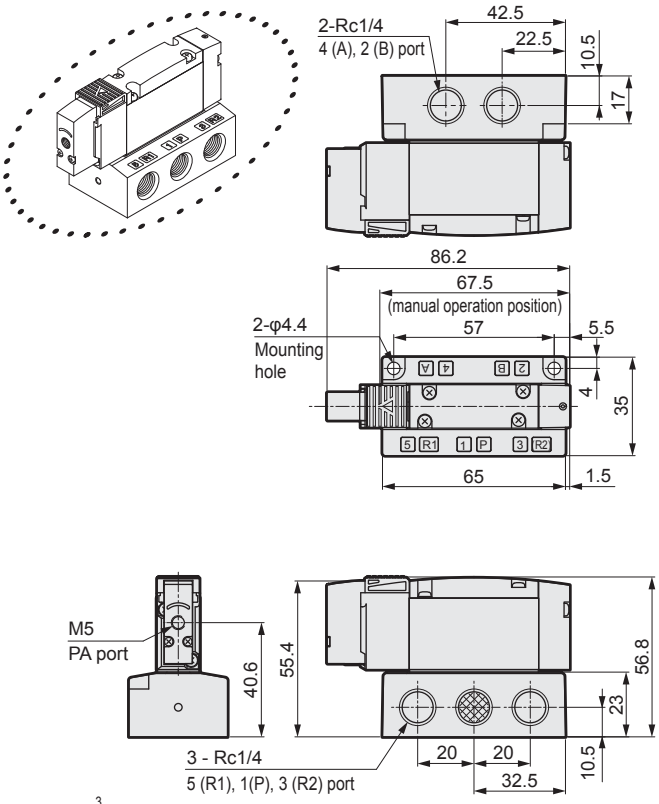

4GB221R

● 2-position double

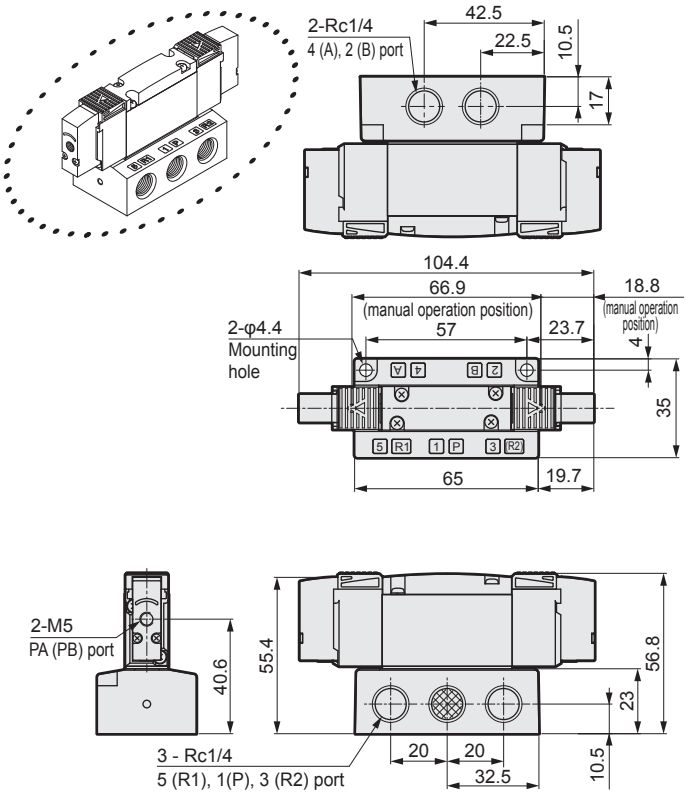

4GB2 $^{3}_{4}_{5}$ 1R

● 3-position

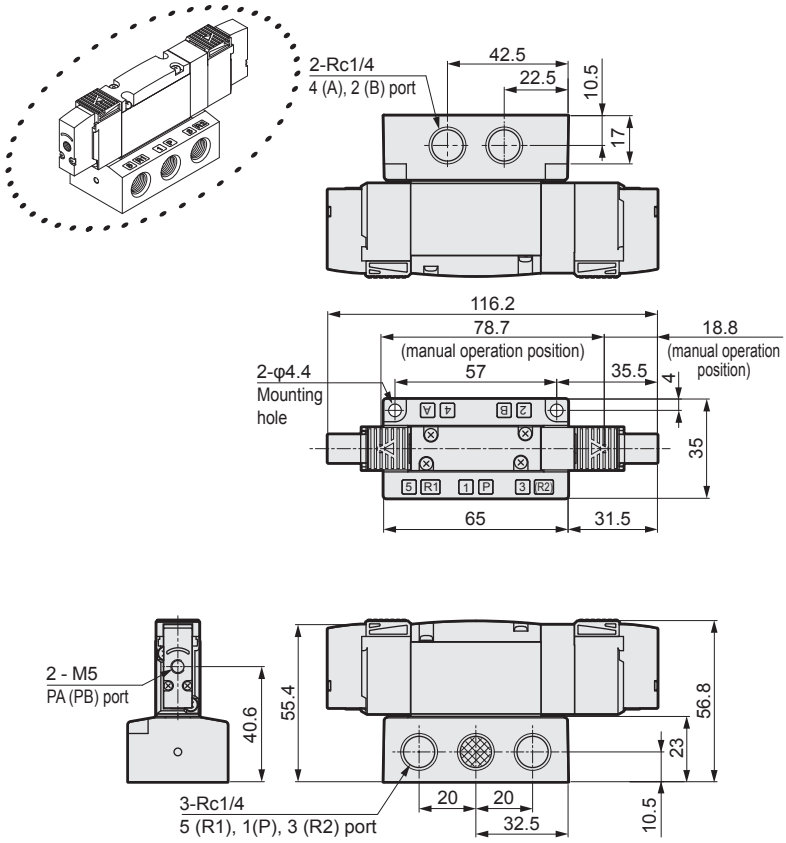

Dimensions CAD

4GB311R

● 2-position single

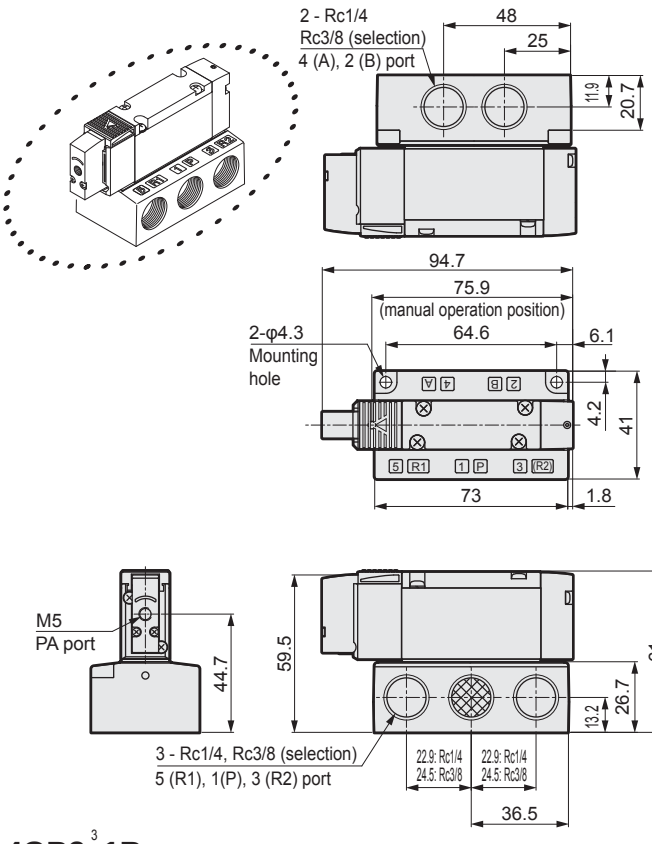

4GB321R

● 2-position double

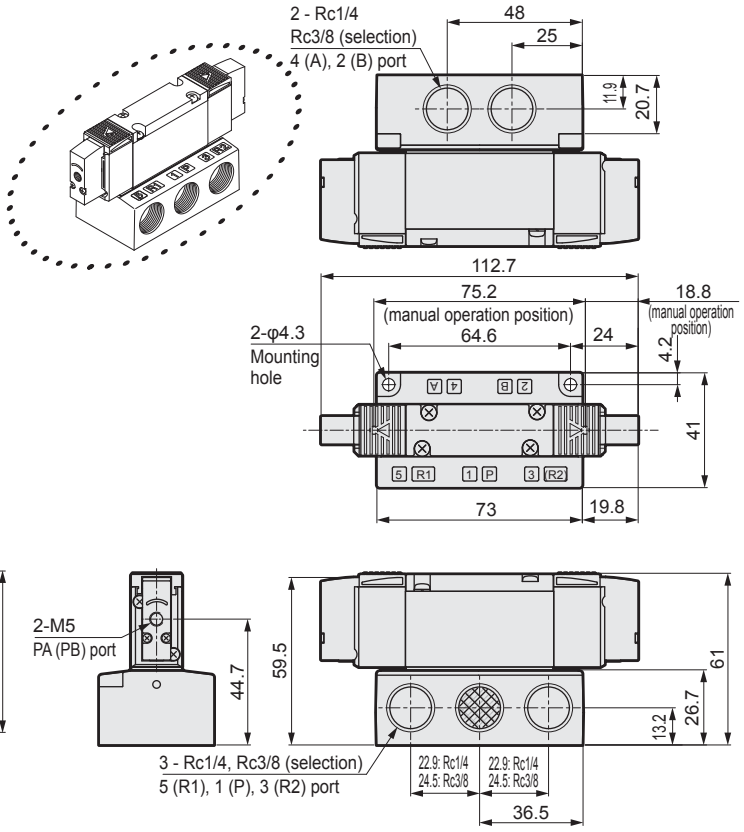

4GB3 3/4/5 1R

● 3-position

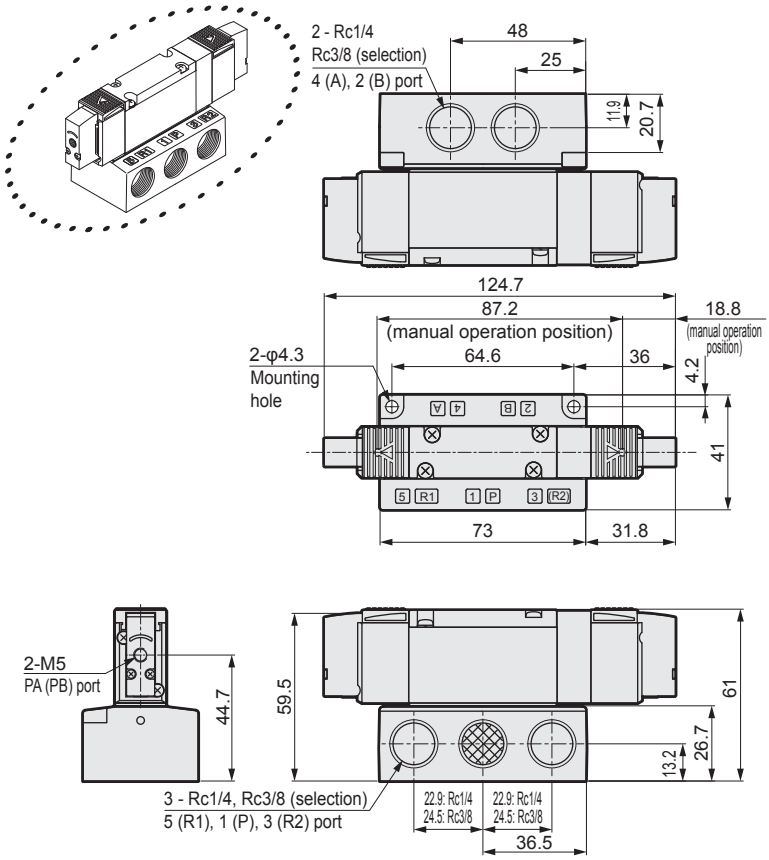

Dimensions

M4GB1

● Direct mount installation

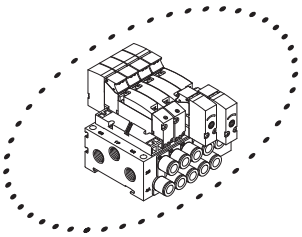

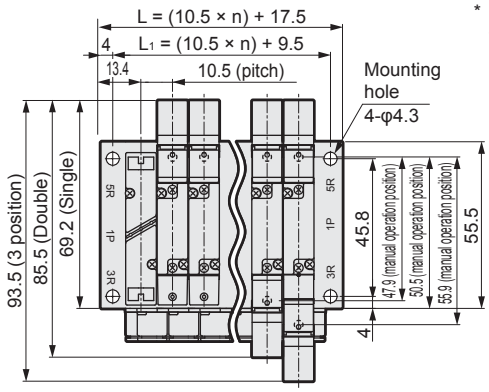

* Female thread type and L type push-in fitting (upward) are the same as those of 4G Series. Refer to each dimensions.

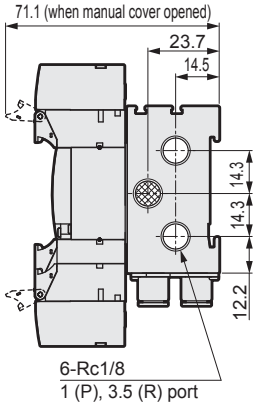

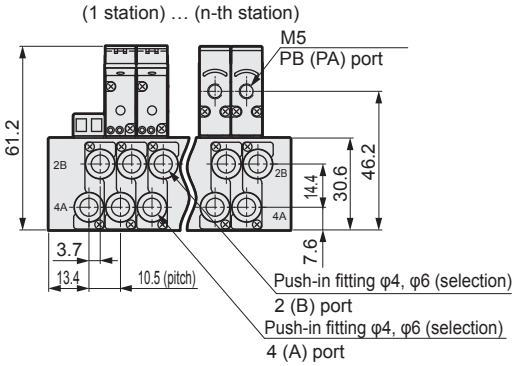

Station no.	2	3	4	5	6	7	8	9	10	11	12	13	14	15	16	17	18	19	20
L	38.5	49.0	59.5	70.0	80.5	91.0	101.5	112.0	122.5	133.0	143.5	154.0	164.5	175.0	185.5	196.0	206.5	217.0	227.5
L_1	30.5	41.0	51.5	62.0	72.5	83.0	93.5	104.0	114.5	125.0	135.5	146.0	156.5	167.0	177.5	188.0	198.5	209.0	219.5

● DIN rail installation (D)

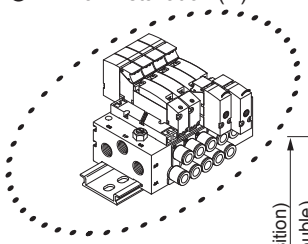

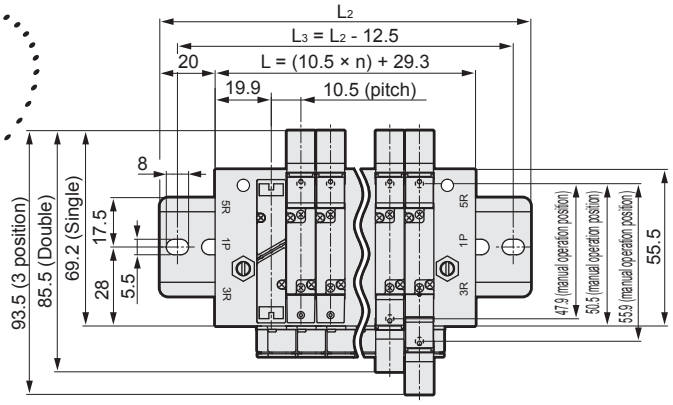

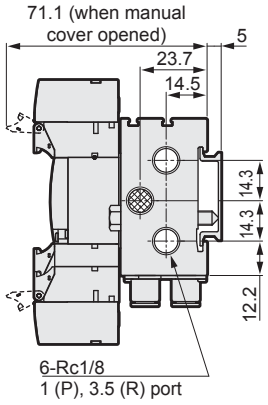

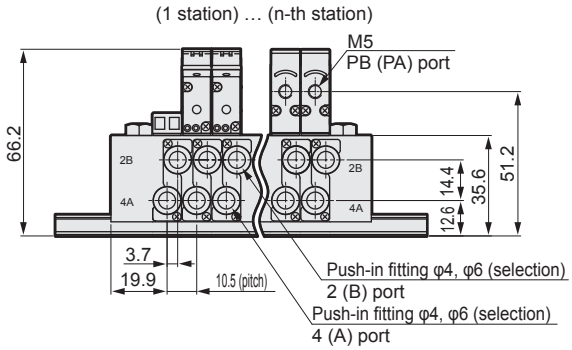

Station no.	2	3	4	5	6	7	8	9	10	11	12	13	14	15	16
L	50.3	60.8	71.3	81.8	92.3	102.8	113.3	123.8	134.3	144.8	155.3	165.8	176.3	186.8	197.3
L_2	100.0	112.5	112.5	125.0	137.5	150.0	162.5	175.0	175.0	187.5	200.0	212.5	225.0	237.5	237.5
L_3	87.5	100.0	100.0	112.5	125.0	137.5	150.0	162.5	162.5	175.0	187.5	200.0	212.5	225.0	225.0

M4GB Series

Master valve manifold; base piping

Dimensions CAD

M4GB2

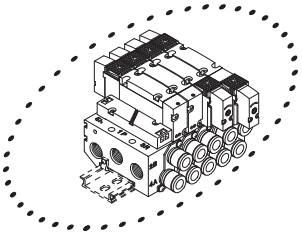

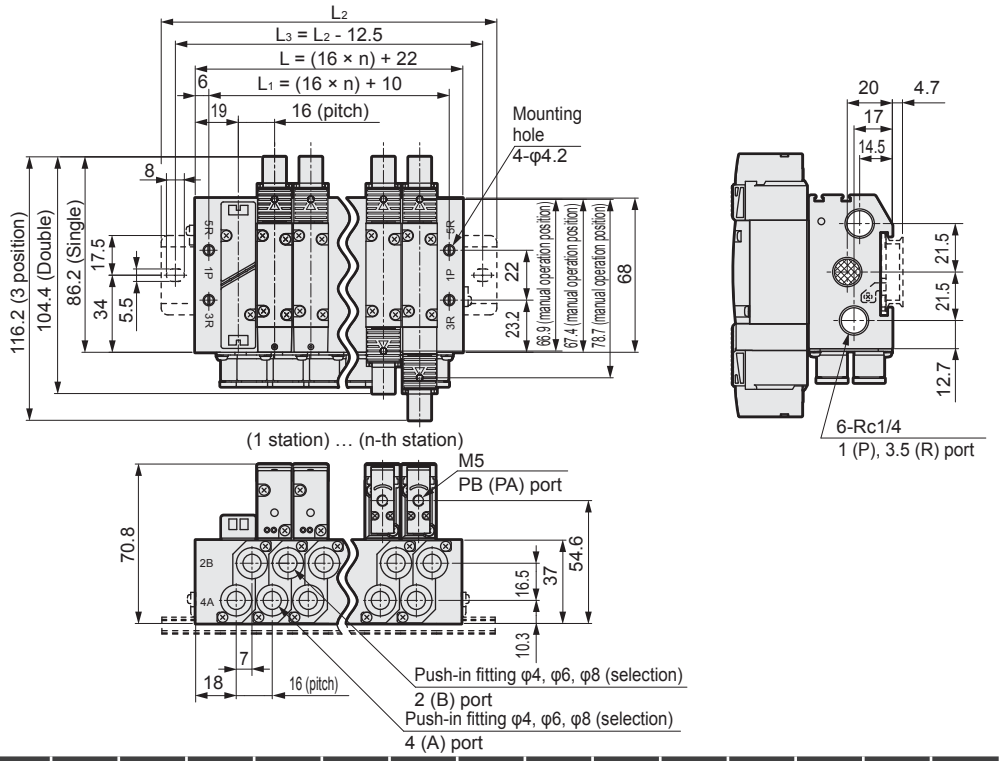

Station no.	2	3	4	5	6	7	8	9	10	11	12	13	14	15	16	17	18	19	20
L	54.0	70.0	86.0	102.0	118.0	134.0	150.0	166.0	182.0	198.0	214.0	230.0	246.0	262.0	278.0	294.0	310.0	326.0	342.0
L_1	42.0	58.0	74.0	90.0	106.0	122.0	138.0	154.0	170.0	186.0	202.0	218.0	234.0	250.0	266.0	282.0	298.0	314.0	330.0
L_2	100.0	112.5	137.5	150.0	162.5	175.0	200.0	212.5	225.0	250.0	262.5	275.0	287.5	312.5	325.0				
L_3	87.5	100.0	125.0	137.5	150.0	162.5	187.5	200.0	212.5	237.5	250.0	262.5	275.0	300.0	312.5				

M4GB3

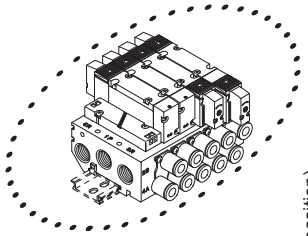

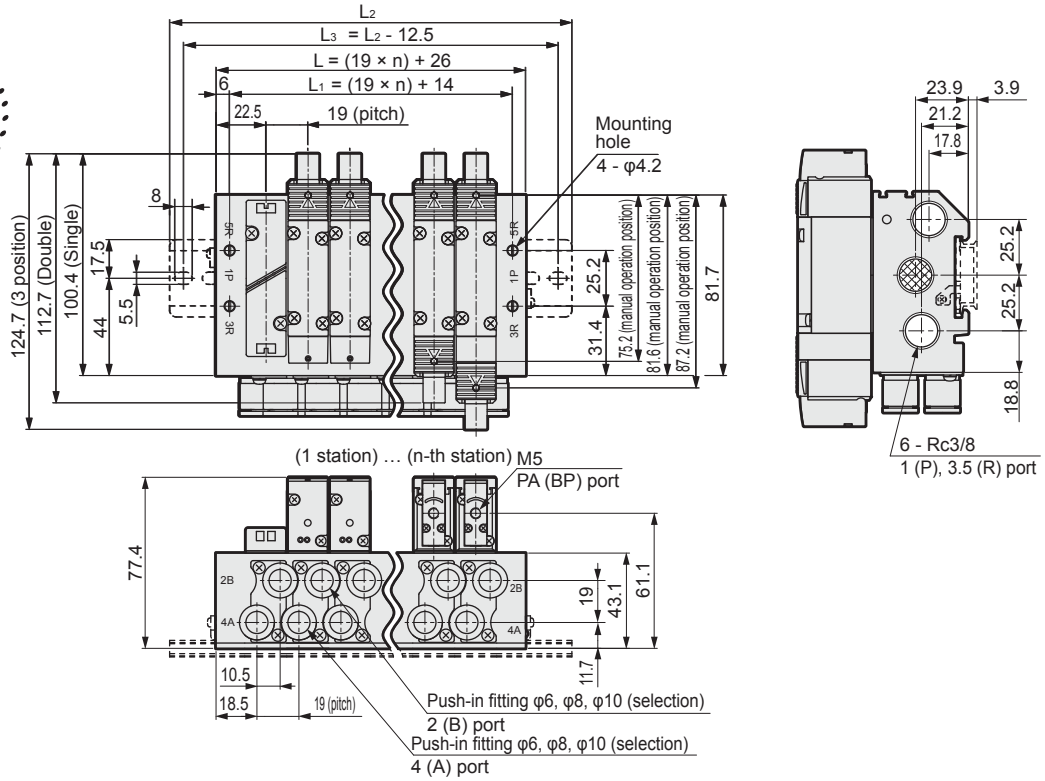

Station no.	2	3	4	5	6	7	8	9	10	11	12	13	14	15	16	17	18	19	20
L	64.0	83.0	102.0	121.0	140.0	159.0	178.0	197.0	216.0	235.0	254.0	273.0	292.0	311.0	330.0	349.0	368.0	387.0	406.0
L_1	52.0	71.0	90.0	109.0	128.0	147.0	166.0	185.0	204.0	223.0	242.0	261.0	280.0	299.0	318.0	337.0	356.0	375.0	394.0
L_2	112.5	125.0	150.0	162.5	187.5	200.0	225.0	237.5	262.5	275.0	300.0	325.0	337.5	362.5	375.0				
L_3	100.0	112.5	137.5	150.0	175.0	187.5	212.5	225.0	250.0	262.5	287.5	312.5	325.0	350.0	362.5				

How to fill out master valve M4G series manifold specification sheet

● Manifold model no. (example)

Cautions for fitting mix CX

The A/B port fitting can be selected freely by indicating "CX" in the port size column.

Available cartridge fitting

4G1	C4, C6 × (plug)
4G2	C4, C6, C8 × (plug)
4G3	C6, C8, C10, × (plug)

Using the base piping type M4GB*11R as a 3 port valve

This can be used as the N.O./N.C. type by attaching a plug cartridge on one side of the A/B port.
Indicate "X" in the fitting CX column.

Switching method	Plug mounting port
N.C. (normally closed)	B
N.O. (normally open)	A

When selecting female thread specifications, indicate the required number of plugs in the "Thread plug" column at the end.
Female threads and a cartridge fitting cannot be used together in one manifold set.

Elbow type specifications

● Only for the single solenoid manifold.
The port A is a long elbow and the port B is a short elbow.

M 4 G (A/B) 1 8 1R- CX - 9

Type of solenoid valve — Valve Position — Port size — Station no.

Solenoid valve model no.	Fitting CX A	Fitting CX B	1	2	3	4	5	6	7	8	9	10	11	12	13	14	15	16	17	18	19	20	21	22	23	24	Quantity
4G B 1 1 8R- CX	C6	X	○	○																							2
4G B 1 1 8R- C6					○	○																					2
4G B 1 2 8R- C6							○	○																			2
4G B 1 5 8R- CX	C6	C4							○	○																	2
4G 1 8R-																											
3GA1 8R-																											
3GA1 8R-																											
4G1R-MP											○																1

Indicate "X" for a plug

Indicate "CX" when changing the fitting combination.

Mounting rail	L2=	Accessories	Blanking plug	Blanking plug	Thread plug	Silencer	Silencer
			GWP4-B	GWP6-B	4G1R-M5P	SLW - 6S	SLW - 6S
			Push-in fitting tube remover (standard attachment) Attachment not required ✓ ☑				

Reference circuit diagram — For manifold configuration as shown above (base porting) (simplified circuit diagram)

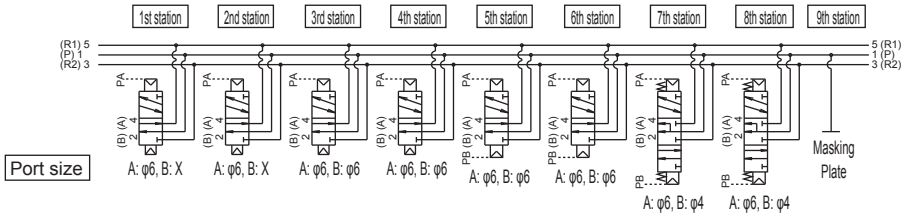

* Manifold stations are set in order from the left with the piping port facing forward.

Preparing the manifold specifications

● Manifold specifications are available for each model. Complete corresponding specifications.

M4G A/B 1 · Page 330
M4G A/B 2 · Page 331
M4G A/B 3 · Page 332

Note 1: For mounting the silencer, check the dimensions in advance.
Note 2: Use SLW-8S for the M4GA2 DIN rail mount type. Interference occurs if SLW-8A is used.

Master valve

M4G$^{A}_{B}$1 manifold specification

Date of issue / /
Your company name
Contact
Order no.

● Contact ● Quantity set(s) ● Delivery date month day

Slip No.	Order No.

● Manifold model no.

M [ ] G$^{A}_{B}$1 [ ] 1R- [ ] - [ ] [ ] - [ ]

Type of solenoid valve | Valve Position | Port size | Other options | Mount type | Station no.

Solenoid valve model no.	Fitting CX A	Fitting CX B	1	2	3	4	5	6	7	8	9	10	11	12	13	14	15	16	17	18	19	20	21	22	23	24	Quantity
4G [ ] 1 [ ] 8R- [ ]																											
4G [ ] 1 [ ] 8R- [ ]																											
4G [ ] 1 [ ] 8R- [ ]																											
4G [ ] 1 [ ] 8R- [ ]																											
4G [ ] 1 [ ] 8R- [ ]																											
3GA1 [ ] 8R- [ ]																											
3GA1 [ ] 8R- [ ]																											
Masking plate 4G1R-MP- [ ]																											
Air supply spacer 4G1R-P- [ ]																											
Air supply spacer 4G1R-P- [ ]																											
In stop valve spacer 4G1R-IS																											
Exhaust spacer 4G1R-R- [ ]																											

Mounting rail	L2= [ ] * Fill in the integral multiple of 12.5.	Attached Part	Blanking plug		Blanking plug		Thread plug		Silencer		Silencer	
			GWP4-B		GWP6-B		4G1R-M5P		SLW - 6S		SLW - 6A	
			Push-in fitting tube remover (standard attachment) ☐ Not required (check)									

Master valve

M4G$^{A}_{B}$2 manifold specification

Date of issue / /

Contact

Order no.

● Contact ● Quantity set(s) ● Delivery date month day

Slip No.	Order No.

● Manifold model no.

M [ ] G$^{A}_{B}$2 [ ] 1R- [ ] - [ ] [ ] - [ ]

Type of solenoid valve | Valve Position | Port size | Other options | Mount type | Station no.

Solenoid valve model no.	Fitting CX A	Fitting CX B	Valve installation position 1	2	3	4	5	6	7	8	9	10	11	12	13	14	15	16	17	18	19	20	21	22	23	24	Quantity
4G [ ] 2 [ ] 8R- [ ]																											
4G [ ] 2 [ ] 8R- [ ]																											
4G [ ] 2 [ ] 8R- [ ]																											
4G [ ] 2 [ ] 8R- [ ]																											
4G [ ] 2 [ ] 8R- [ ]																											
3GA2 [ ] 8R- [ ]																											
3GA2 [ ] 8R- [ ]																											
Masking plate 4G2R-MP- [ ]																											
Air supply spacer 4G2R-P- [ ]																											
Air supply spacer 4G2R-P- [ ]																											
In stop valve spacer 4G2R-IS																											
Exhaust spacer 4G2R-R- [ ]																											

Mounting rail	L_2= [ ] * Fill in the integral multiple of 12.5.	Attached Part	Blanking plug						Thread plug		Silencer			
			GWP4-B		GWP6-B		GWP8-B		4G2R-06P		SLW - 8S		SLW - 8A	

Master valve

M4G$^{A}_{B}$3 manifold specification

Date of issue / /

Contact

Order no.

● Contact ● Quantity set(s) ● Delivery date month day

Slip No.	Order No.

● Manifold model no.

M [ ] **G$^{A}_{B}$3** [ ] **1R-** [ ] **-** [ ] [ ] **-** [ ]

Type of solenoid valve | Valve Position | Port size | Other options | Mount type | Station no.

Solenoid valve model no.	Fitting CX A	Fitting CX B	1	2	3	4	5	6	7	8	9	10	11	12	13	14	15	16	17	18	19	20	21	22	23	24	Quantity
4G [ ] 3 [ ] 8R- [ ]																											
4G [ ] 3 [ ] 8R- [ ]																											
4G [ ] 3 [ ] 8R- [ ]																											
4G [ ] 3 [ ] 8R- [ ]																											
4G [ ] 3 [ ] 8R- [ ]																											
3GA3 [ ] 8R- [ ]																											
3GA3 [ ] 8R- [ ]																											
Masking plate 4G3R-MP- [ ]																											
Air supply spacer 4G3R-P- [ ]																											
Air supply spacer 4G3R-P- [ ]																											
In stop valve spacer 4G3R-IS																											
Exhaust spacer 4G3R-R- [ ]																											

Mounting rail	L2= [ ] * Fill in the integral multiple of 12.5.	Attached Part	Blanking plug						Thread plug		Silencer			
			GWP6-B		GWP8-B		GWP10-B		4G3R-08P		SLW - 10A		SLW-10L	