4KA/4KB

3, 5 port pilot operated valve — Pneumatic valve / master valve

CONTENTS

Master valve Body porting
3, 5 port pilot operated pneumatic valve
3KA1, 4KA1/2/3/4 Series

● Applicable cylinder bore size: ø20 to ø160

RoHS

JIS symbol

● 3-port valve

2-position N.C. type single

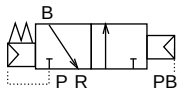

2-position N.O. type single

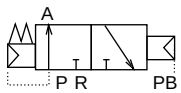

2-position double solenoid

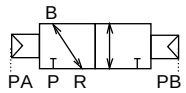

● 5 port valve

2-position single solenoid

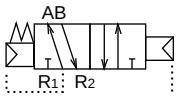

2-position double solenoid

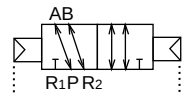

3-position all ports closed

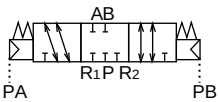

3-position A/B/R connection

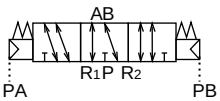

3-position P/A/B connection

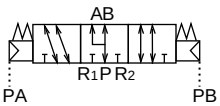

Common specifications

Descriptions	
Valve type / operation method	Pilot operated soft spool
Working fluid	Compressed air
Max. working pressure MPa	0.70
Min. working pressure MPa	Refer to main pressure in the table below.
Withstanding pressure MPa	1.05
Ambient temperature °C	-5 to 50 (no freezing)
Fluid temperature °C	5 to 50
Lubrication	Not required
Vibration/impact m/s^2	50 / 300 or less
Working environment	Containing corrosive gas is impermissible.

Individual specifications: Body porting (discrete valve, manifold)

No. of solenoid, position							Model no.		Specifications					
									*1 Port size					
2-position single sol. N.C.	2-position single sol. N.O.	2-position single solenoid	2-position double solenoid	3-position all ports closed	3-position A/B/R connection	3-position P/A/B connection	Series model no.		Supply port P	Cylinder port A/B	Exhaust port R1/R2	Pilot port PA/PB	Main pressure MPa	Pilot signal pressure MPa
●							3KA1 Series	3KA111	M5	M5	M5	M5	0.15 to 0.7	(0.6 x main pressure + 0.06) to 0.7
●								M3KA111	Rc1/8		Rc1/8			
	●							3KA1111	M5		M5			
	●							M3KA1111	Rc1/8		Rc1/8			
			●					3KA121	M5		M5		0 to 0.7	0.15 to 0.7
			●					M3KA121	Rc1/8		Rc1/8			
		●					4KA1 Series	4KA111	M5	M5	M5	M5	0.15 to 0.7	(0.6 x main pressure + 0.06) to 0.7
		●						M4KA111	Rc1/8		Rc1/8			
			●					4KA121	M5		M5		0 to 0.7	0.15 to 0.7
			●					M4KA121	Rc1/8		Rc1/8			
				●				4KA131	M5		M5			0.2 to 0.7
				●				M4KA131	Rc1/8		Rc1/8			
					●			4KA141	M5		M5			
					●			M4KA141	Rc1/8		Rc1/8			
						●		4KA151	M5		M5			
						●		M4KA151	Rc1/8		Rc1/8			
		●					4KA2 Series	4KA211	Rc1/8	Rc1/8	Rc1/8	M5	0.15 to 0.7	(0.6 x main pressure + 0.06) to 0.7
		●						M4KA211	Rc1/4		Rc1/4			
			●					4KA221	Rc1/8		Rc1/8		0 to 0.7	0.2 to 0.7
			●					M4KA221	Rc1/4		Rc1/4			
				●				4KA231	Rc1/8		Rc1/8			
				●				M4KA231	Rc1/4		Rc1/4			
					●			4KA241	Rc1/8		Rc1/8			
					●			M4KA241	Rc1/4		Rc1/4			
						●		4KA251	Rc1/8		Rc1/8			
						●		M4KA251	Rc1/4		Rc1/4			
		●					4KA3 Series	4KA311	Rc1/4	Rc1/4	Rc1/4	M5	0.15 to 0.7	(0.6 x main pressure + 0.06) to 0.7
		●						M4KA311	Rc3/8		Rc3/8			
			●					4KA321	Rc1/4		Rc1/4		0 to 0.7	0.2 to 0.7
			●					M4KA321	Rc3/8		Rc3/8			
				●				4KA331	Rc1/4		Rc1/4			
				●				M4KA331	Rc3/8		Rc3/8			
					●			4KA341	Rc1/4		Rc1/4			
					●			M4KA341	Rc3/8		Rc3/8			
						●		4KA351	Rc1/4		Rc1/4			
						●		M4KA351	Rc3/8		Rc3/8			
		●					4KA4 Series	4KA411	Rc3/8	Rc3/8	Rc3/8	M5	0.15 to 0.7	(0.6 x main pressure + 0.06) to 0.7
		●						M4KA411	Rc1/2		Rc1/2			
			●					4KA421	Rc3/8		Rc3/8		0 to 0.7	0.2 to 0.7
			●					M4KA421	Rc1/2		Rc1/2			
				●				4KA431	Rc3/8		Rc3/8			
				●				M4KA431	Rc1/2		Rc1/2			
					●			4KA441	Rc3/8		Rc3/8			
					●			M4KA441	Rc1/2		Rc1/2			
						●		4KA451	Rc3/8		Rc3/8			
						●		M4KA451	Rc1/2		Rc1/2			

*1: Optional port size other than above table are available. Refer to model no. on page 870.

Flow characteristics

Series	Model no.	Port size	C (dm^3/ (s·bar))	b
3KA1	3KA111	M5	0.65	0.37
	M3KA111		0.69	0.29
	3KA1111		0.65	0.37
	M3KA1111		0.69	0.29
	3KA121		0.65	0.37
	M3KA121		0.69	0.29
4KA1	4KA111	M5	0.65	0.37
	M4KA111		0.69	0.29
	4KA121		0.65	0.37
	M4KA121		0.69	0.29
	4KA131		0.60	0.32
	M4KA131		0.69	0.29
	4KA141		0.68	0.39
	M4KA141		0.97	0.31
	4KA151		0.61	0.36
	M4KA151		0.73	0.30
4KA2	4KA211	RC1/8	2.6	0.43
	M4KA211		2.6	0.25
	4KA221		2.6	0.43
	M4KA221		2.6	0.25
	4KA231		2.3	0.43
	M4KA231		2.4	0.32
	4KA241		2.9	0.34
	M4KA241		3.0	0.16
	4KA251		2.3	0.42
	M4KA251		2.4	0.31
4KA3	4KA311	RC1/4	5.6	0.49
	M4KA311		5.6	0.39
	4KA321		5.6	0.49
	M4KA321		5.6	0.39
	4KA331		4.1	0.60
	M4KA331		4.1	0.51
	4KA341		4.1	0.62
	M4KA341		5.9	0.37
	4KA351		4.2	0.68
	M4KA351		4.1	0.56
4KA4	4KA411	RC3/8	9.8	0.49
	M4KA411		9.7	0.29
	4KA421		9.8	0.49
	M4KA421		9.7	0.29
	4KA431		8.2	0.54
	M4KA431		8.3	0.40
	4KA441		11	0.50
	M4KA441		11	0.30
	4KA451		8.4	0.54
	M4KA451		8.7	0.46

Note 1: Effective sectional area S and sonic conductance C are converted as S ≒ 5.0 x C.

How to order

● Discrete master valve

4KA2 1 1 - 06 - ◯

● Discrete master valve for manifold (gasket and set screw attached)

4KA2 1 8 - 06

● Manifold

M 4KA2 1 1 - 06 - ◯ - 2

Solenoid valve type master valve

Ⓐ Model no.

Ⓑ Solenoid position

Ⓒ Port size

Ⓓ Other options

Ⓔ Station number

Symbol	Descriptions	Ⓐ Model no. 3KA1	4KA1	4KA2	4KA3	4KA4
Ⓑ Solenoid position						
1	2-position single solenoid N.C. type	●				
11	2-position single solenoid N.O. type	●				
1	2-position single solenoid		●	●	●	●
2	2-position double solenoid	●	●	●	●	●
3	3-position all ports closed		●	●	●	●
4	3-position A/B/R connection		●	●	●	●
5	3-position P/A/B connection		●	●	●	●
8	2/3-position mix manifold Note 1		●	●	●	●
Ⓒ Port size						
P/A/B port						
M5	M5	●	●			
06	Rc1/8			●		
08	Rc1/4				●	
10	Rc3/8					●
GS4	ø4 push-in joint	●	●			
GS6	ø6 push-in joint	●	●	●		
GS8	ø8 push-in joint			●	●	
GS10	ø10 push-in joint				●	●
GS12	ø12 push-in joint					●
Ⓓ Other options						
Blank	None	●	●	●	●	●
P	Mounting plate (discrete master valve, 2-position single dedicated)	●	●	●	●	●
Ⓔ Station number						
2 to 15	2 to 15 stations				●	●
2 to 20	2 to 20 stations	●	●	●		

<Example of model number>

4KA311-08-P

Ⓐ Model : 4KA3
Ⓑ Solenoid position : 2-position single solenoid
Ⓒ Port size : Rc1/4
Ⓓ Other options: Mounting plate

⚠ Note on model no. selection

Note 1: 8 is suitable for the manifold combination.
Refer to the section below for details on indicating the combination.

<Mix manifold>

● How to indicate mix manifold
When selecting a mixed manifold (8 for "B"), clearly indicate the required function symbol (refer to Table 1) and layout No. (assign numbers to designated number of stations starting with 1 on left side) in the Remarks field under the normal model indication as shown with the example below.

(Table 1)

Symbol	Function
S1	2-position single solenoid
S2	2-position double solenoid
S3	3-position all ports closed
S4	3-position A/B/R connection
S5	2-position P/A/B connection
MP	Masking plate

1	2	3	4	5	6	7
2-position single (S1)	2-position double (S2)	3-position all ports closed (S3)	3-position all ports closed (S3)	2-position double (S2)	2-position single (S1)	3-position A/B/R connection (S4)

S1	S2	S3	S4	S5	MP
2	2	2	1	0	0

Example

The model for the mixed manifold (7 stations) with layout as shown at left, 4KA3, A/B port: Rc1/8, and upper piping is as follows:

M4KA381-06-7- 2 2 2 1 0 0

S1=1, 6 S2=2, 5 S3=3, 4 S4=7
Symbol Position

Dimensions

3 port valve

3KA111

● 2-position single solenoid N.C. type

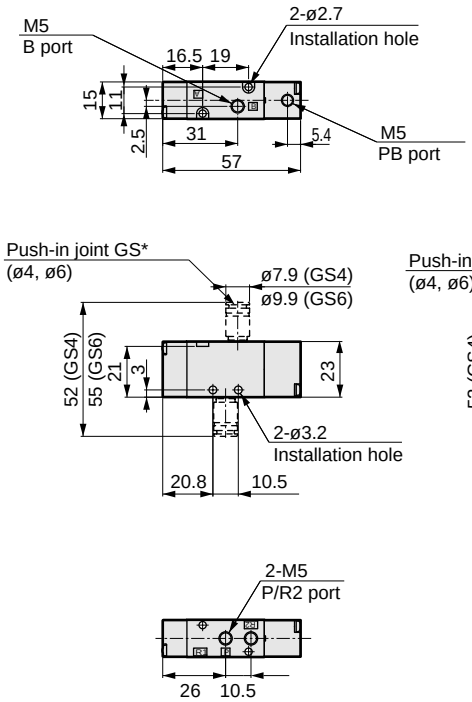

3KA1111

● 2-position single solenoid N.O. type

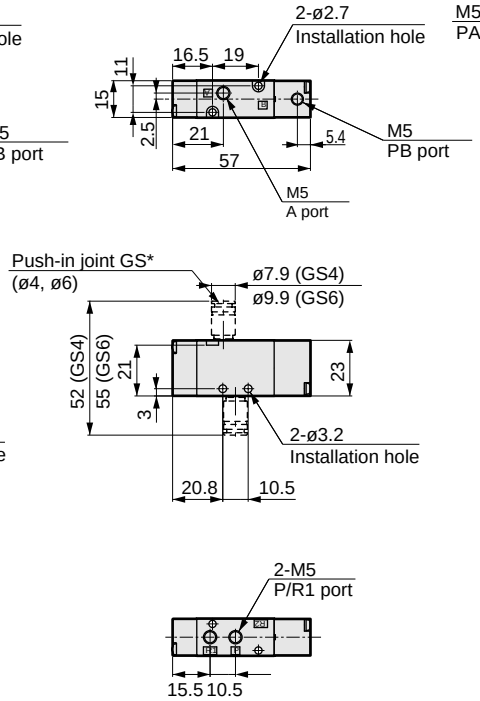

3KA121

● 2-position double solenoid

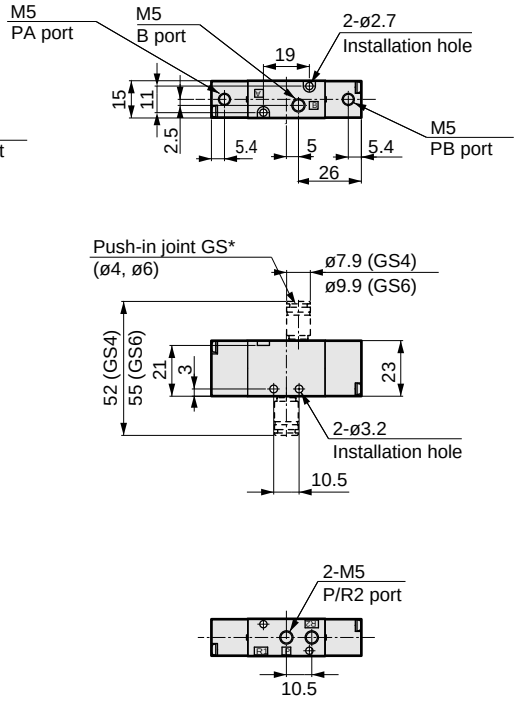

5 port valve

4KA111

● 2-position single solenoid

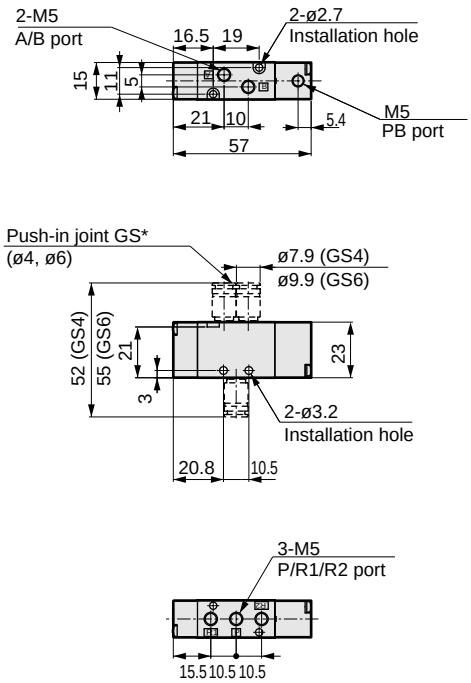

4KA1 2/3/4/5 1

● 2-position double solenoid / 3-position

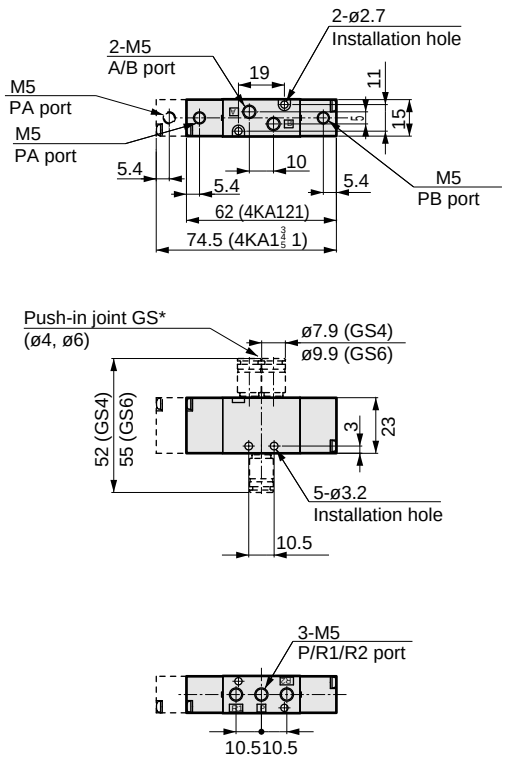

Dimensions

4KA211

● 2-position single solenoid

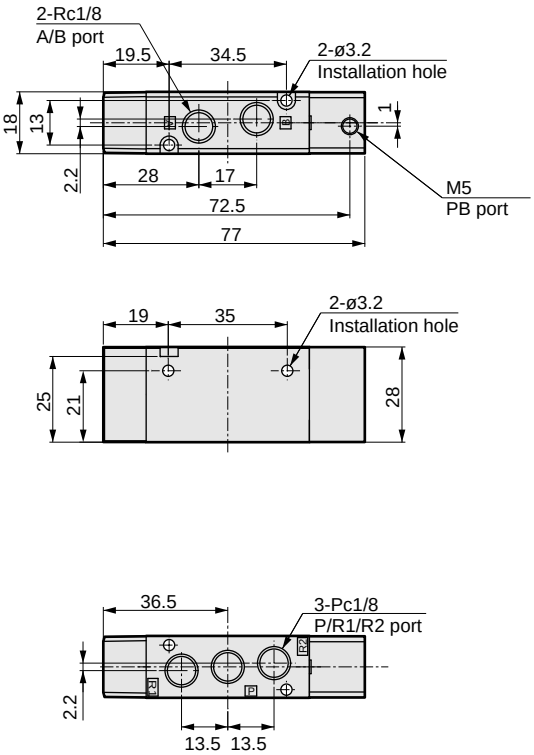

4KA2 2/3/4/5 1

● 2-position double solenoid / 3-position

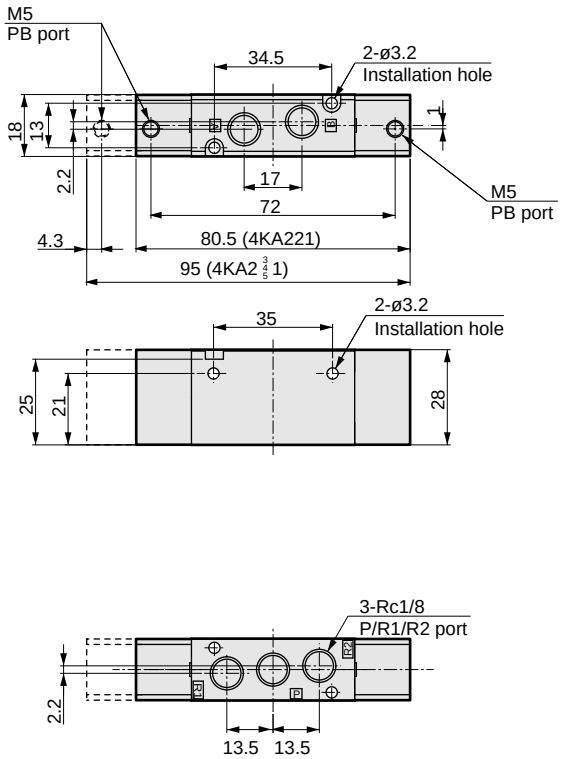

4KA311

● 2-position single solenoid

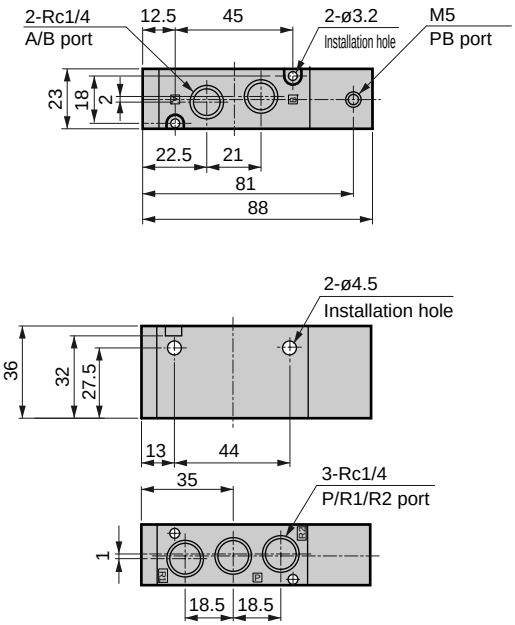

4KA3 2/3/4/5 1

● 2-position double solenoid / 3-position

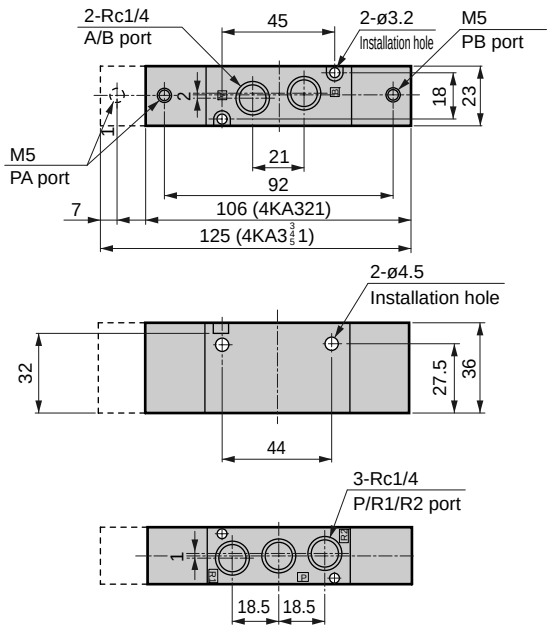

Dimensions

4KA411

● 2-position single solenoid

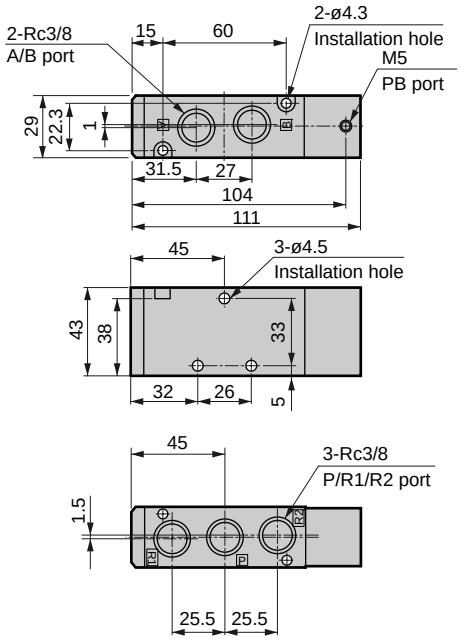

4KA4 $^{2}_{3}_{4}_{5}$ 1

● 2-position double solenoid / 3-position

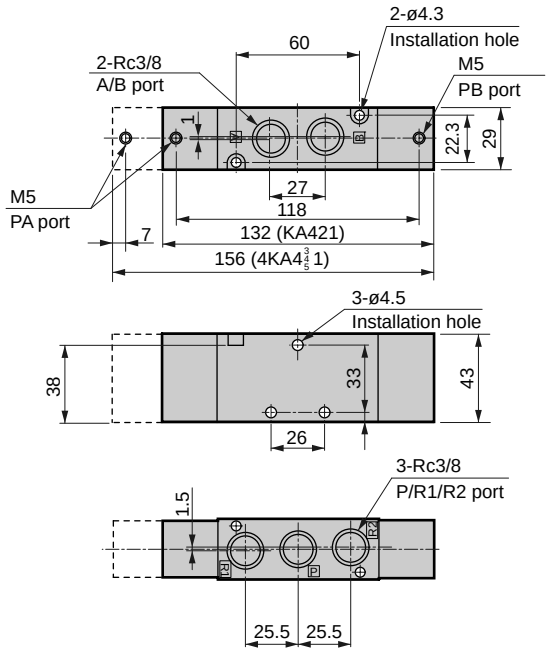

Master valve Sub-plate porting
3, 5 port pilot operated pneumatic valve
4KB1/2/3/4 Series

● Applicable cylinder bore size: ø20 to ø160

RoHS

JIS symbol

● 5 port valve

2-position single solenoid

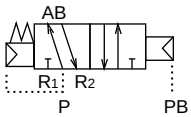

2-position double solenoid

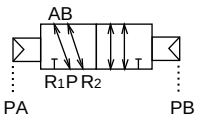

3-position all ports closed

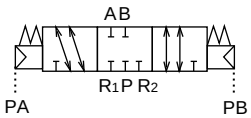

3-position A/B/R connection

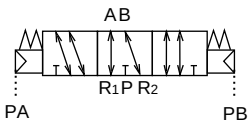

3-position P/A/B connection

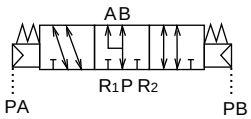

R1 and R2 are common exhaust only for 4KB1

Common specifications

Descriptions	
Valve type / operation method	Pilot operated soft spool
Working fluid	Compressed air
Max. working pressure MPa	0.70
Min. working pressure MPa	Refer to main pressure in the table below.
Ambient temperature °C	-5 to 50
Fluid temperature °C	5 to 50
Lubrication	Not required
Vibration/impact m/s^2	50 or less / 300 or less
Working environment	Corrosion-free environment

Individual specifications: Sub-plate porting (discrete valve, manifold)

No. of solenoid, position					Model no.		Specifications					
							*1 Port size					
2-position single solenoid	2-position double solenoid	3-position all ports closed	3-position A/B/R connection	3-position P/A/B connection	Series model no.		Supply port P	Cylinder port A/B	Exhaust port R1/R2	Pilot port PA/PB	Main pressure MPa	Pilot signal pressure MPa
●					4KB1 Series	4KB111	Rc1/8	Rc1/8	Rc1/8	M5	0.15 to 0.7	(0.6 x main pressure + 0.06) to 0.7
●						M4KB111		M5, Rc1/8				
	●					4KB121		Rc1/8			0 to 0.7	0.15 to 0.7
	●					M4KB121		M5, Rc1/8				
		●				4KB131		Rc1/8				0.2 to 0.7
		●				M4KB131		M5, Rc1/8				
			●			4KB141		Rc1/8				
			●			M4KB141		M5, Rc1/8				
				●		4KB151		Rc1/8				
				●		M4KB151		M5, Rc1/8				
●					4KB2 Series	4KB211	Rc1/8	Rc1/8	Rc1/4	M5	0.15 to 0.7	(0.6 x main pressure + 0.06) to 0.7
●						M4KB211	Rc1/4					
	●					4KB221	Rc1/8				0 to 0.7	0.2 to 0.7
	●					M4KB221	Rc1/4					
		●				4KB231	Rc1/8					
		●				M4KB231	Rc1/4					
			●			4KB241	Rc1/8					
			●			M4KB241	Rc1/4					
				●		4KB251	Rc1/8					
				●		M4KB251	Rc1/4					
●					4KB3 Series	4KB311	Rc1/4	Rc1/4	Rc1/4	M5	0.15 to 0.7	(0.6 x main pressure + 0.06) to 0.7
●						M4KB311	Rc3/8		Rc3/8			
	●					4KB321	Rc1/4		Rc1/4		0 to 0.7	0.2 to 0.7
	●					M4KB321	Rc3/8		Rc3/8			
		●				4KB331	Rc1/4		Rc1/4			
		●				M4KB331	Rc3/8		Rc3/8			
			●			4KB341	Rc1/4		Rc1/4			
			●			M4KB341	Rc3/8		Rc3/8			
				●		4KB351	Rc1/4		Rc1/4			
				●		M4KB351	Rc3/8		Rc3/8			
●					4KB4 Series	4KB411	Rc3/8	Rc3/8	Rc3/8	M5	0.15 to 0.7	(0.6 x main pressure + 0.06) to 0.7
●						M4KB411	Rc1/2		Rc1/2			
	●					4KB421	Rc3/8		Rc3/8		0 to 0.7	0.2 to 0.7
	●					M4KB421	Rc1/2		Rc1/2			
		●				4KB431	Rc3/8		Rc3/8			
		●				M4KB431	Rc1/2		Rc1/2			
			●			4KB441	Rc3/8		Rc3/8			
			●			M4KB441	Rc1/2		Rc1/2			
				●		4KB451	Rc3/8		Rc3/8			
				●		M4KB451	Rc1/2		Rc1/2			

*1: Optional port size other than above table are available. Refer to a model no. on page 876.

Flow characteristics

Series	Model no.	Port size	C (dm^3/ (s·bar))	b
4KB1	4KB111	Rc1/8	0.89	0.44
	M4KB111	M5, Rc1/8	0.71	0.25
	4KB121	Rc1/8	0.89	0.44
	M4KB121	M5, Rc1/8	0.71	0.25
	4KB131	Rc1/8	0.63	0.50
	M4KB131	M5, Rc1/8	0.60	0.23
	4KB141	Rc1/8	1.2	0.29
	M4KB141	M5, Rc1/8	0.81	0.25
	4KB151	Rc1/8	0.75	0.39
	M4KB151	M5, Rc1/8	0.67	0.32
4KB2	4KB211	Rc1/8	2.7	0.24
	M4KB211		2.1	0.13
	4KB221		2.7	0.24
	M4KB221		2.1	0.13
	4KB231		2.4	0.29
	M4KB231		1.8	0.11
	4KB241		3	0.27
	M4KB241		2	0.17
	4KB251		2.4	0.34
	M4KB251		1.8	0.23
4KB3	4KB311	Rc1/4	6.3	0.26
	M4KB311		4.5	0.11
	4KB321		6.3	0.26
	M4KB321		4.5	0.11
	4KB331		5.6	0.27
	M4KB331		4.4	0.21
	4KB341		6.6	0.20
	M4KB341		4.8	0.18
	4KB351		5.9	0.27
	M4KB351		4.3	0.20
4KB4	4KB411	Rc3/8	12	0.24
	M4KB411		8.9	0.22
	4KB421		12	0.24
	M4KB421		8.9	0.22
	4KB431		11	0.27
	M4KB431		8.9	0.24
	4KB441		13	0.21
	M4KB441		9.4	0.23
	4KB451		10	0.22
	M4KB451		8.6	0.20

Note 1: Effective sectional area S and sonic conductance C are converted as S ≒ 5.0 x C.

4KB1 to 4 Series

Master valve: Sub-plate porting

How to order

● Discrete master valve

4KB2 (1) 1 - (06)

● Discrete master valve for manifold (gasket and set screw attached)

4KB2 (1) 8 - (00)

● Manifold

(M) 4KB2 (1) 1 - (06) - (2)

Solenoid valve type Master valve

Ⓐ Model no.

Ⓑ Solenoid position

Ⓒ Port size

Ⓓ Station number

Symbol	Descriptions	Ⓐ Model no. 4KB1	4KB2	4KB3	4KB4
Ⓑ Solenoid position					
1	2-position single solenoid	●	●	●	●
2	2-position double solenoid	●	●	●	●
3	3-position all ports closed	●	●	●	●
4	3-position A/B/R connection	●	●	●	●
5	3-position P/A/B connection	●	●	●	●
8	2/3-position mix manifold Note 1	●	●	●	●
Ⓒ Port size					
P/A/B port					
M5	M5 Note 2	●			
06	Rc1/8	●	●		
08	Rc1/4		●	●	
10	Rc3/8			●	●
15	Rc 1 / 2				●
M5Y	M5 (back porting) Note 2	●			
06Y	Rc1/8 (back porting) Note 2		●		
08Y	Rc1/4 (back porting) Note 2			●	
10Y	Rc3/8 (back porting) Note 2				●
H 6	ø6 push-in joint Note 2, 3	●	●		
H 8	ø8 push-in joint Note 2, 3		●	●	
H 10	ø10 push-in joint Note 2			●	●
H 12	ø12 push-in joint Note 2				●
Ⓓ Station number					
2 to 12	2 to 12 stations				●
2 to 15	2 to 15 stations			●	
2 to 20	2 to 20 stations	●	●		

<Example of model number>

4KB311-08

Ⓐ Model: 4KB3
Ⓑ Solenoid position: 2-position single solenoid
Ⓒ Port size : Rc1/4

⚠ Note on model no. selection

Note 1: 8 is suitable for the manifold combination.
Refer to the section below for details on indicating the combination.
Note 2: M5 and *Y/H* can be selected for the manifold. These are not available as discrete parts.
Note 3: H6 and H8 can be manufactured up to 10 stations.

<Mix manifold>

● How to indicate mix manifold
When selecting a mixed manifold (8 for "B"), clearly indicate the required function symbol (refer to Table 1) and layout No. (assign numbers to designated number of stations starting with 1 on left side) in the Remarks field under the normal model indication as shown with the example below.

(Table 1)

Symbol	Function
S1	2-position single solenoid
S2	2-position double solenoid
S3	3-position all ports closed
S4	3-position A/B/R connection
S5	2-position P/A/B connection
MP	Masking plate

1	2	3	4	5	6	7
2-position single (S1)	2-position double (S2)	3-position all ports closed (S3)	3-position all ports closed (S3)	2-position double (S2)	2-position single (S1)	3-position A/B/R connection (S4)

S1	S2	S3	S4	S5	MP
2	2	2	1	0	0

Example

The model for the mixed manifold (7 stations) with layout as shown at left, 4KB3, A/B port: Rc1/8, and radial piping is as follows:

M4KB381-06-7- 2 2 2 1 0 0

S1=1, 6 S2=2, 5 S3=3, 4 S4=7
Symbol Position

Dimensions

4KB111

● 2-position single solenoid

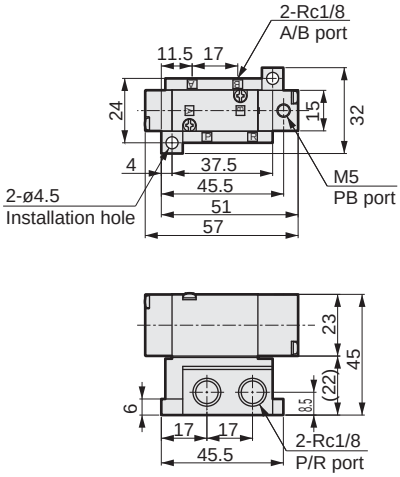

4KB1 2/3/4/5 1

● 2-position double solenoid / 3-position

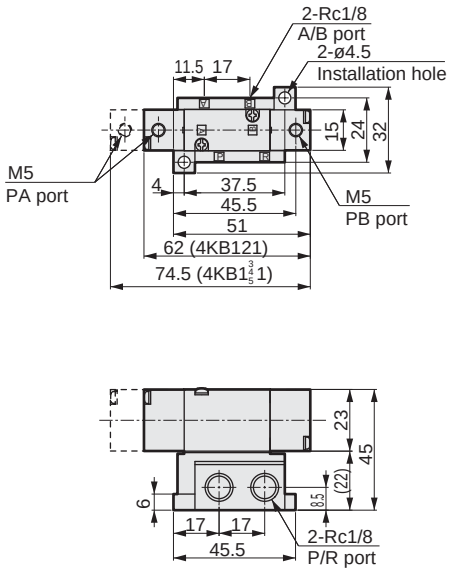

4KB211

● 2-position single solenoid

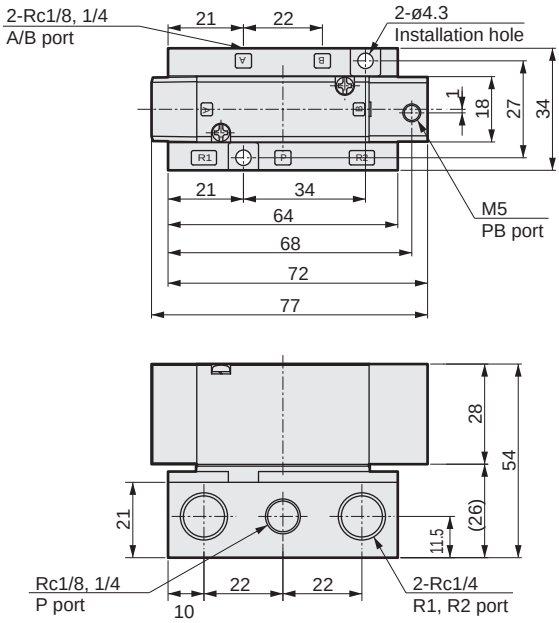

4KB2 2/3/4/5 1

● 2-position double solenoid / 3-position

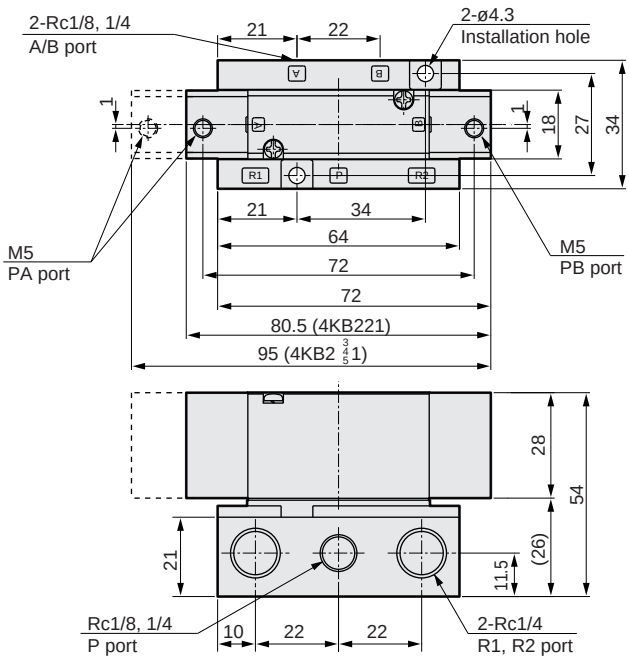

MN3E0
MN4E0
4GA/B
M4GA/B
MN4GA/B
4GA/B (Master)
W4GA/B2
W4GB4
MN3S0
MN4S0
4TB
4L2-4/ LMF0
4SA/B0
4SA/B1
4KA/B
4F
PV5G/ CMF
PV5/ CMF
3MA/B0
3PA/B
P/M/B
NP/NAP/ NVP
4F*0E
HMV
HSV
2QV
3QV
SKH
PCD/ FS/FD
Ending

Dimensions

4KB311

● 2-position single solenoid

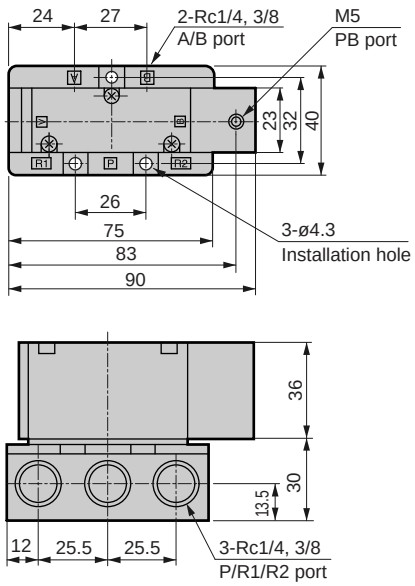

4KB3$^{2}_{3}_{4}_{5}$1

● 2-position double solenoid / 3-position

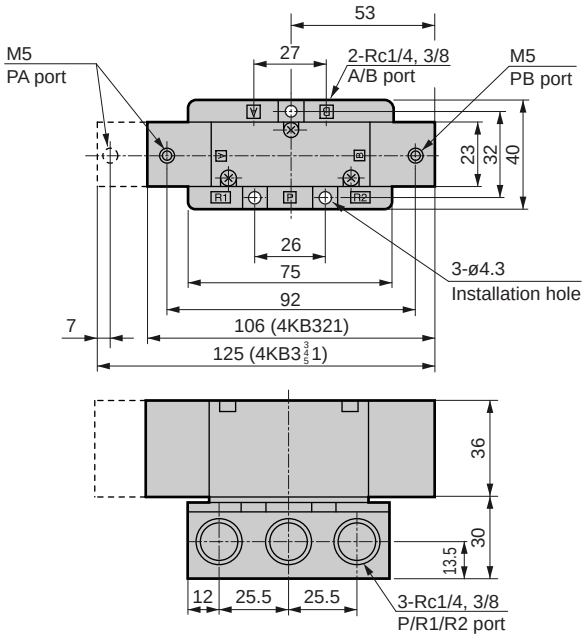

4KB411

● 2-position single solenoid

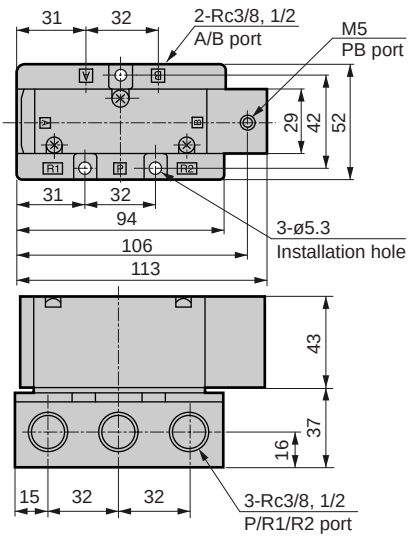

4KB4$^{2}_{3}_{4}_{5}$1

● 2-position double solenoid / 3-position

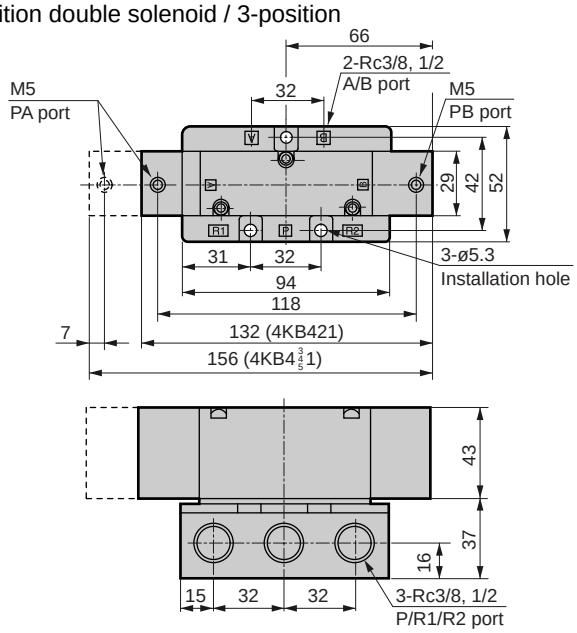

The air cylinder's average speed is calculated with the 4K$^{A}_{B}$ Series and piping system combination.

Example: For a system to move SCA2-63 at 500 mm/s, the system "4" device can be selected. For clean air system devices, select devices that enable air flow 520 ℓ/min. or more required for system "4".

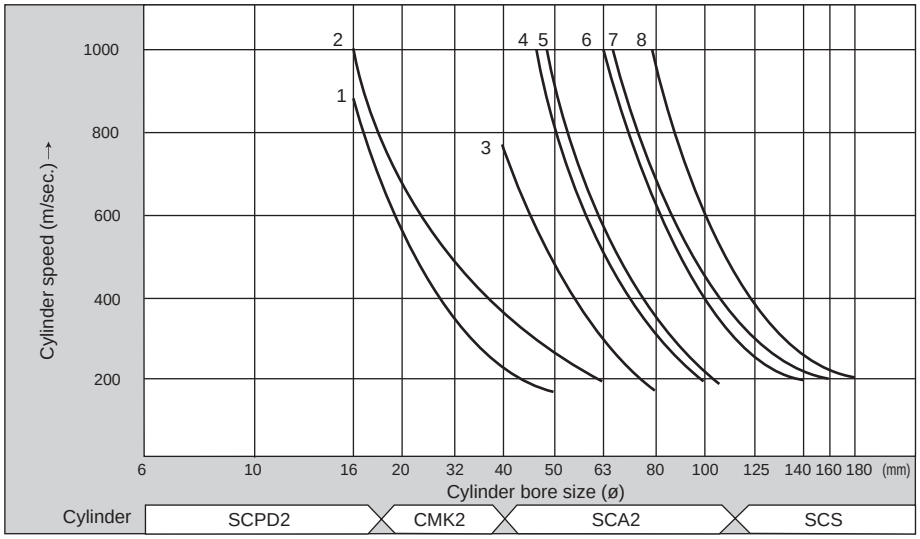

Standard system table

System No.	Valve	Flow control valve	Silencer	Piping (1 m)	Composite effective sectional area(mm²)	Required flow (ℓ/min.)
1	4KA1$^{1}_{2}$0-M5	SC-M5-S	SL-M5	ø4 x ø2.5	1.6	115
2	4KB1$^{1}_{2}$0-06	SC1-6	SLW-6S	ø6 x ø4	3.2	215
3	4KA2$^{1}_{2}$0-06	SC1-6	SLW-6S	ø6 x ø4	4.8	346
4	4KB2$^{1}_{2}$0-08	SC1-8	SLW-8S	ø8 x ø5.7	8	581
5	4KA3$^{1}_{2}$0-08	SC1-8	SLW-8S	ø8 x ø5.7	9.1	660
6	4KB3$^{1}_{2}$0-10	SC1-10	SLW-10L	ø10 x ø7.2	16.5	1285
7	4KA4$^{1}_{2}$0-10	SC1-10	SLW-10L	ø10 x ø7.2	19	1289
8	4KB4$^{1}_{2}$0-15	SC1-15	SLW-15A	ø12 x ø8.9	25.8	1749

Note 1: The required flow rate is the condition when pressure is 0.5 MPa.
Note 2: Effective sectional area S and sonic conductance C are converted as S ≒ 5.0 x C.

Clean air system components

Part name	Model no.	Port size	Maximum flow rate ℓ/min. (ANR)
F.R.L. combination	C1000-6	Rc 1/8	450
	C1000-8	Rc 1/4	630
	C3000-8	Rc 1/4	1280
	C3000-10	Rc 3/8	1750
	C4000-8	Rc 1/4	1430
	C4000-10	Rc 3/8	2400
	C4000-15	Rc 1/2	3000
	C8000-20	Rc 3/4	7000
	C8000-25 (-A32)	Rc1 (Rc1 1/4)	7500
F.R. unit	W1000-6	Rc 1/8	830
	W1000-8	Rc 1/4	1150
	W3000-8	Rc 1/4	2150
	W3000-10	Rc 3/8	2430
	W4000-8	Rc 1/4	2500
	W4000-10	Rc 3/8	4350
	W4000-15 (-A20)	Rc 1/2, Rc 3/4	4750
	W8000-20	Rc 3/4	10000
	W8000-25 (-A32)	Rc1 (Rc1 1/4)	10000
Air filter (F)	F1000-6	Rc 1/8	460
	F1000-8	Rc 1/4	610
	F3000-8	Rc 1/4	1230
	F3000-10	Rc 3/8	1500
	F4000-8	Rc 1/4	1320
	F4000-10	Rc 3/8	2140
	F4000-15 (-A20)	Rc 1/2 (Rc 3/4)	3000
	F8000-20	Rc 3/4	6400
	F8000-25 (-A32)	Rc1 (Rc1 1/4)	6800

Part name	Model no.	Port size	Maximum flow rate ℓ/min. (ANR)
Regulator (R)	R1000-6	Rc 1/8	770
	R1000-8	Rc 1/4	1350
	R3000-8	Rc 1/4	2000
	R3000-10	Rc 3/8	2600
	R4000-8	Rc 1/4	2500
	R4000-10	Rc 3/8	4400
	R4000-15	Rc 1/2 (Rc 3/4)	5000
	R8000-20	Rc 3/4	14000
	R8000-25 (-A32)	Rc1 (Rc1 1/4)	11000
Lubricator (L)	L1000-6	Rc 1/8	550
	L1000-8	Rc 1/4	700
	L3000-8	Rc 1/4	1100
	L3000-10	Rc 3/8	2250
	L4000-8	Rc 1/4	1000
	L4000-10	Rc 3/8	1700
	L4000-15 (-A20)	Rc 1/2 (Rc 3/4)	2700
	L8000-20	Rc 3/4	6300
	L8000-25 (-A32)	Rc1 (Rc1 1/4)	10000

(Note)
Max. flow rate: For FRL, FR and R, the flow rate at a 0.7 MPa primary pressure, 0.5 MPa setting pressure, and 0.1 MPa pressure drop. For F, the flow rate at 0.7 MPa primary pressure and 0.02 MPa pressure drop. For L, the flow rate at 0.5 MPa primary pressure and 0.03 MPa pressure drop.

How to wire terminal box and connector

Refer to the following drawings for terminal block wiring and for C and D connector connection.

Small terminal box wiring methods (applicable model 3KA1, 4K$^{A}_{B}$1, 4K$^{A}_{B}$2)

Wire following steps 1 to 6 below.

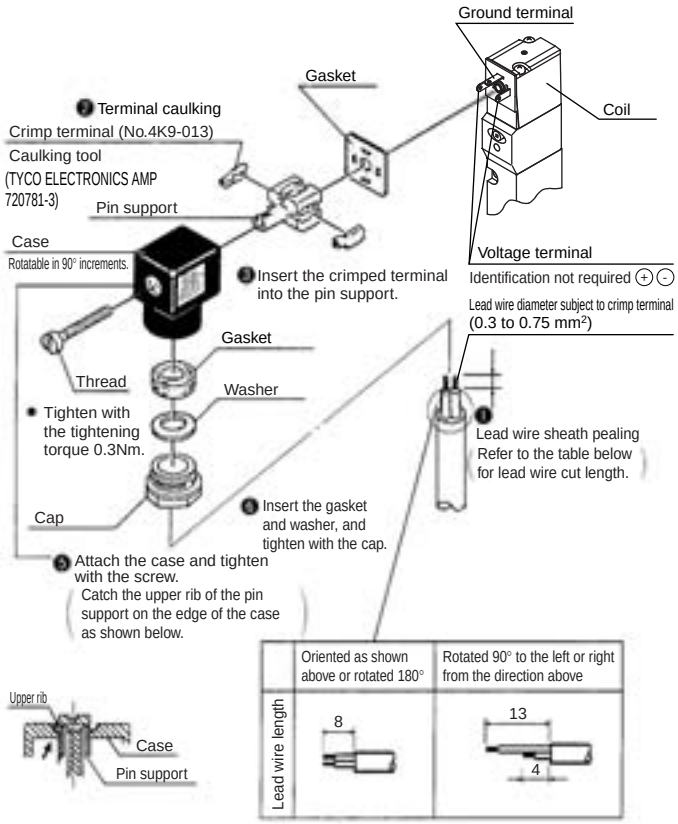

Terminal box wiring methods (applicable model 4K$^{A}_{B}$2, 4K$^{A}_{B}$4)

Refer to the following drawing, and wire the terminal box following steps 1 to 3 below.

1) Pass the cap (4), washer (5), and gasket (6) in order through the cabtire cable (7), and insert in case (2).
2) When using a crimp terminal, treat the cabtire cable (7) at an appropriate length as shown in the figure, and crimp the crimp terminal (9) onto the end.
3) Remove screw (10) from terminal gland (3), and pass through crimp terminal (9). (When using the Y type terminal, loosen and sandwich the terminal.) Then, tighten screw (10) again.
   Note: Tighten at a torque of 5kgf-cm ±15%.

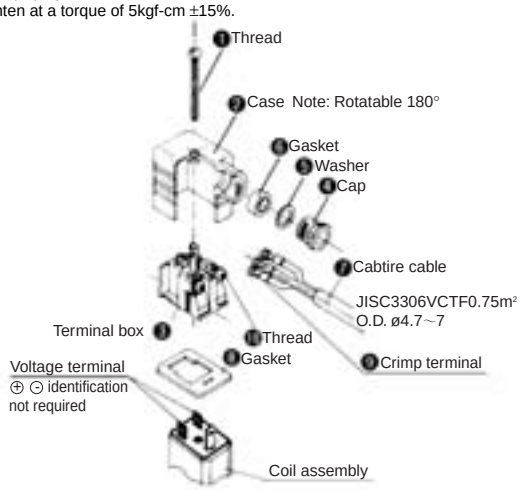

Remarks:
- Bare wires can be wired. In this case, loosen screw (10), and insert leads into the fitting, then tighten again.
- The cord's direction can be changed by pulling the gland out of the case, rotating it 180°, then pressing it into the case again.
- The following crimp terminals (8) can be used.

NICHIFU TERMINAL		FUJI TERMINAL		JST Mfg.	
O terminal	Y terminal	O terminal	Y terminal	O terminal	Y terminal
0.3-3 1.25-3 1.25-3S	0.3-3 1.25Y-3 1.25Y-3.5	1.25-3		0.5-3 1.25-3	0.25-B3A 1.25-C3A

Use equivalent products when using other brands.

C/D-connector wiring method (applicable model 3KA1, 4K$^{A}_{B}$ Series)

Wire following steps ❶ to ❻ below.

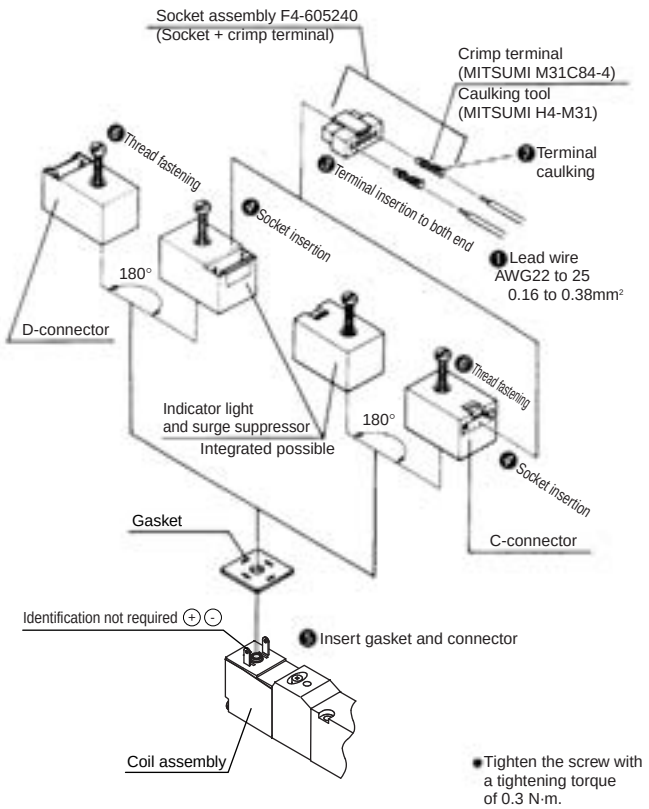

Small terminal box with indicator light wiring methods (applicable model 3KA1, 4K$^{A}_{B}$1, 4K$^{A}_{B}$2)

Wire following steps ❶ to ❺ below.