# GW Joint

## Port size M3 to 1/2 (Rc or R)

● Wide connection joints and models

CAD

### ■ Straight type

**Single straight GWS*-***

| Applicable tube O.D.ø |
|---|
| 4 |
| 6 |
| 8 |
| 10 |
| 12 |
| 16 |

• Page : 934

**Single straight GWS*-*-S**

| Applicable tube O.D.ø |
|---|
| 3.2 |
| 4 |
| 6 |
| 8 |
| 10 |
| 12 |

• Page : 934

**Female, straight GWS*-*-M**

| Applicable tube O.D.ø |
|---|
| 4 |
| 6 |
| 8 |
| 10 |
| 12 |

• Page : 934

**Bulk head female GWS*-*-E**

| Applicable tube O.D.ø |
|---|
| 4 |
| 6 |
| 8 |
| 10 |
| 12 |

• Page : 934

**Bulk head GWS*-*-X**

| Applicable tube O.D.ø |
|---|
| 4 |
| 6 |
| 8 |
| 10 |
| 12 |

• Page : 935

**Bulk head female connector GWM*-*-X**

| Applicable tube O.D.ø |
|---|
| 4 |
| 6 |
| 8 |
| 10 |
| 12 |

• Page : 935

**Straight GWS*-0**

| Applicable tube O.D.ø |
|---|
| 4 |
| 6 |
| 8 |
| 10 |
| 12 |
| 16 |

• Page : 935

**Different diameter straight GWS*-0**

| Applicable tube O.D.ø |
|---|
| 4 / 6 |
| 6 /8 |
| 8 / 10 |
| 10 /12 |

• Page : 935

**Plug reducer GWS*-*P**

| Applicable tube O.D.ø |
|---|
| 4 |
| 6 |
| 8 |
| 10 |

• Page : 936

**Plug GWP*-0**

| Connecting joint diameter ø |
|---|
| 4 |
| 6 |
| 8 |
| 10 |
| 12 |

• Page : 936

### ■ Elbow type

**Plug reducer GWP*-0**

| Connecting joint diameter ø |
|---|
| 4 / 6 |
| 6 / 8 |
| 8 / 10 |
| 10 / 12 |

• Page : 936

**Single elbow GWL*-***

| Applicable tube O.D.ø |
|---|
| 4 |
| 6 |
| 8 |
| 10 |
| 12 |
| 16 |

• Page : 936

**Long elbow GWL*-*-L**

| Applicable tube O.D.ø |
|---|
| 4 |
| 6 |
| 8 |
| 10 |
| 12 |

• Page : 937

**Single 45˚ elbow GWL*-*-45**

| Applicable tube O.D.ø |
|---|
| 4 |
| 6 |
| 8 |
| 10 |
| 12 |

• Page : 937

**Turn elbow GWL*-*-T**

| Applicable tube O.D.ø |
|---|
| 4 |
| 6 |
| 8 |
| 10 |
| 12 |

• Page : 937

### ■ Tee union type

**Elbow GWL*-0**

| Applicable tube O.D.ø |
|---|
| 4 |
| 6 |
| 8 |
| 10 |
| 12 |
| 16 |

• Page : 937

**Both push-in branch GWT*-***

| Applicable tube O.D.ø |
|---|
| 4 |
| 6 |
| 8 |
| 10 |
| 12 |

• Page : 938

**D type union Tee GWT*-*-D**

| Applicable tube O.D.ø |
|---|
| 4 |
| 6 |
| 8 |
| 10 |
| 12 |

• Page : 938

**Union Tee GWT-0**

| Applicable tube O.D.ø |
|---|
| 4 |
| 6 |
| 8 |
| 10 |
| 12 |

• Page : 938

**Y type union Tee GWY*-0**

| Applicable tube O.D.ø |
|---|
| 4 / 4 |
| 6 / 6 |
| 8 / 8 |
| 10 / 10 |
| 12 / 12 |
| 6 / 4 |
| 8 / 6 |
| 10 / 8 |
| 12 / 10 |

• Page : 938



● Sales unit is 10 pieces/1 box.

Product introduction: Page 932
Specifications, model no., internal structure: Page 933

| Both ports Y tee union GWY*-* | Cross shaped GWCR*-0 | 2 port turn elbow GWL*-*-2T | Tetrapod shaped (with R) GWTR*-* | FY type (with R) GWFY*-* |
|---|---|---|---|---|
| | | | | |
| Applicable tube O.D.ø: 4, 6, 8, 10, 12 | Applicable tube O.D.ø: 8, 10, 12 | Applicable tube O.D.ø: 4, 6, 8, 10, 12 | Applicable tube O.D.ø: 4, 6, 8, 10, 12 | Applicable tube O.D.ø: 4, 6, 8, 10, 12 |
| • Page : 939 | • Page : 939 | • Page : 939 | • Page : 939 | • Page : 940 |

| Double Y type (with R) GWWY*-* | Tetrapod shaped GWTR*-0 | FY type GWFY*-0 | Double Y type GWWY*-0 | Blanking plug GWP*-B |
|---|---|---|---|---|
| | | | | |
| Applicable tube O.D.ø: 4, 6 | Applicable tube O.D.ø: 4, 6, 8, 10, 12 | Applicable tube O.D.ø: 4, 6, 8, 10, 12 | Applicable tube O.D.ø: 6 / 4, 8 / 6 | Connecting joint diameter ø: 4, 6, 8, 10, 12, 16 |
| • Page : 940 | • Page : 940 | • Page : 940 | • Page : 941 | • Page : 941 |

| L type plug GWP*-L | C type plug GWP*-C | Y type plug GWP*-Y | Cap GWC* | Manifold (single/with R) GWMF*-* |
|---|---|---|---|---|
| | | | | |
| Applicable tube O.D.ø: 4, 6, 8, 10, 12 | Applicable tube O.D.ø: 4, 6, 8, 10, 12 | Applicable tube O.D.ø: 4, 6, 8, 10, 12 | Applicable tube O.D.ø: 4, 6, 8, 10, 12 | Applicable tube O.D.ø: 4 / 6, 4 / 8, 6 / 8, 6 / 10, 8 / 10 |
| • Page : 941 | • Page : 941 | • Page : 942 | • Page : 942 | • Page : 942 |

| Manifold (single solenoid) GWMF*-0 | Manifold (double/with R) GWMF*-*-W | Manifold (double solenoid) GWMF*-0-W | Insert ring Custom order | |
|---|---|---|---|---|
| | | | | |
| Applicable tube O.D.ø: 4 / 6, 4 / 8, 6 / 8, 6 / 10, 8 / 10 | Applicable tube O.D.ø: 4 / 8, 6 / 10, 8 / 12 | Applicable tube O.D.ø: 4 / 8, 6 / 10, 8 / 12 | Applicable tube O.D.ø: 4, 6, 8, 10, 12 | |
| • Page : 942 | • Page : 943 | • Page : 943 | • Page : 943 | |

● Sales unit is 10 pieces/1 box.

# GW Joint

## Port size M3 to 1/2 (Rc or R)

## Work environment and device-friendly flame-resistant white body

### Joint series for greatly reducing piping space

1. Push in joint for pneumatic piping.
2. Compact size for space saving.
3. V shaped packing seal to realize smooth insertion and accurate seal.
4. Freely rotating elbow union to make piping and removal work easier.
5. White body blends into working environment. Electroless nickel used for brass sections.
6. Flame resistant resin (equivalent to UL94 Standards V-0) used for GW Series body and push ring.

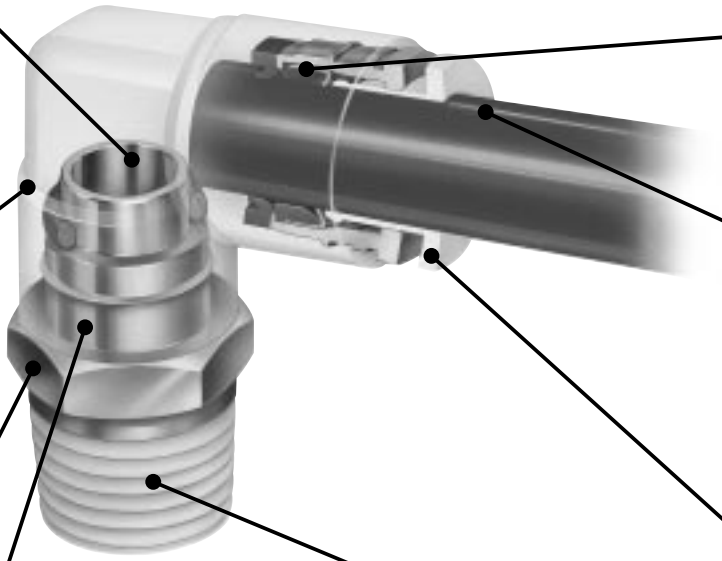

**Full flow within bore size**
- There are no sections narrower than the bore size.
- A flow equivalent to the bore size can be run.

**White color Flame resistance resin (GW series)**
- White body blends into the work environment.
- Flame resistance PBT (Equivalent to UL94 standards V-O) is provided as standard.

**Electroless nickel used for brass sections**
- Electroless nickel is used as standard for all brass parts to improve corrosion resistance and appearance.

**Easy piping work**
- The section of the pipe connected with the main unit rotates freely, so the piping removal direction can be set as needed.

**Accurate tube holding**
- The chuck bracket acts in the direction in which the tube is dislocated, ensuring highly reliable holding.

**Push-in installation**
- The tube can be connected to the piping joint by pushing the tube in.
- V shaped packing is used for the seal between the tube and joint. The tube can be inserted with light force while obtaining a sure seal.

**Easy tube removal**
- The push evenly pushes and opens the chuck, so the tube is completely released from the chuck and can be removed smoothly.

**Sealant applied on threads as standard**
- Teflon resin is coated on threads.
- Sealing tape is not needed, reducing work hours.
- An even seal is attached and there is no worry of leakage, etc.

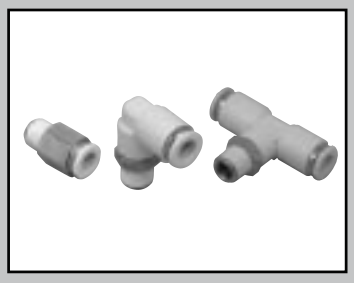

Joint

# GW Series

- Port size M3 to R1/2
- Applicable tube ø3.2 to ø12

RoHS

## Specifications

| Descriptions | | GW |
|---|---|---|
| Working fluid | | Compressed air |
| Max. working pressure | MPa | 1.0 |
| Negative pressure | KPa | -100 Note2 |
| Working temperature | ˚C | -10 to 60 (no freezing) |
| Applicable tube | | Soft nylon tube (F-15**) |
| | | Urethane tube (U-95**, NU-**) Note1 |

Note 1: Refer to page 1008 for tube dimensions, ambient temperature and working pressure.
Note 2: Use a urethane tube (U95-* */NU-* *) and an insert ring together.

**Ozone specifications** (Ending 5)

GW –……– P11

**Clean room specifications**

(catalog No. CB-033SA)

GW –……– P7*

GW –……– P80

## How to order

* Refer to model no. sections on dimensions page (pages 934 to 943) for combination of model no.

GW L 6 - 8 - 45 -

A B C D E

| A Shape | |
|---|---|
| S | Straight |
| L | Elbow |
| T | Union Tee |
| TR | Tetrapod shaped |
| Y | Y type union Tee |
| FY | FY type |
| WY | Double Y types |
| CR | Cross shaped |
| P | Plug |
| C | Cap |
| M | Bulkhead female connector |
| MF | Manifold |

| B Applicable tube O.D. | |
|---|---|
| 4 | ø4 |
| 6 | ø6 |
| 8 | ø8 |
| 10 | ø10 |
| 12 | ø12 |
| 16 | ø16 |
| 44 | ø4, ø4 |
| 46 | ø4, ø6 |
| 48 | ø4, ø8 |
| 64 | ø6, ø4 |
| 66 | ø6, ø6 |
| 68 | ø6, ø8 |
| 610 | ø6, ø10 |
| 86 | ø8, ø6 |
| 88 | ø8, ø8 |
| 810 | ø8, ø10 |
| 812 | ø8, ø12 |
| 108 | ø10, ø8 |
| 1010 | ø10, ø10 |
| 1012 | ø10, ø12 |
| 1210 | ø12, ø10 |
| 1212 | ø12, ø12 |

| C Port size | |
|---|---|
| M3 | M3×0.5 |
| M5 | M5×0.8 |
| 6 | R1/8 |
| 8 | R1/4 |
| 10 | R3/8 |
| 15 | R1/2 |
| 0 | No thread |
| 4P | Plug for ø4 |
| 6P | Plug for ø6 |
| 8P | Plug for ø8 |
| 10P | Plug for ø10 |
| 12P | Plug for ø12 |
| B | Blanking plug |
| C | C type plug |
| L | L type plug |
| Y | Y type plug |

| D Other combinations | |
|---|---|
| L | Long |
| T | Turn |
| D | D type |
| X | Bulk head |
| S | Round |
| M | Female type |
| E | Bulk head female |
| W | Double solenoid |
| 2T | 2-port turn |
| 45 | Single 45˚ |

Note: Sales unit is 10 pcs. /1 bag.

| E Option | |
|---|---|
| Blank | None |
| P6 | Copper and PTFE free |

## Internal structure and parts list

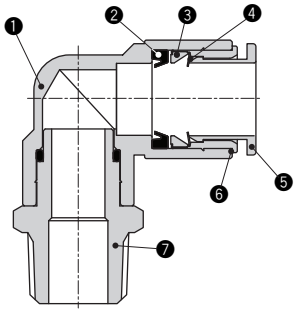


| No. | Parts name | Material |
|---|---|---|
| 1 | Body *1 | Brass (electroless nickeling treatment) |
| | | PBT (flame resistance resin *2) |
| 2 | Packing seal | Nitrile rubber |
| 3 | Chuck holder | Polyetherimide |
| 4 | Chuck | Stainless steel |
| 5 | Push ring | PBT (flame resistance resin *2) |
| 6 | Outer ring | Brass (electroless nickeling treatment) |
| 7 | Drive nipple | Brass (electroless nickeling treatment) |

*1: The body of the single-ended straight, single-ended straight (round), female straight, bulkhead female, bulkhead, and bulkhead female connector is brass (electroless nickel plated).
*2: Equivalent to UL94 standards V-0

Refrigerating type dryer
Desiccant type dryer
High polymer membrane type dryer
Air filter
Auto. drain / others
F.R.L. (Module unit)
F.R.L. (Separate)
Compact F.R.
Precise regulator
F.R.L. (Related products)
Clean F.R.
Electro pneumatic regulator
Air booster
Speed control valve
Silencer
Check valve / others
Joint / tube
Vacuum filter
Vacuum regulator
Suction plate
Magnetic spring buffer
Mechanical pressure SW
Electronic pressure SW
Contact / close contact cont. SW
Air sensor
Pressure SW for coolant
Small flow sensor
Small flow controller
Flow sensor for air
Flow sensor for water
Total air system
Total air system (Gamma)
Ending

# Dimensions: Single straight, single straight (round), female straight, bulk head female

CAD

## Single straight

● GWS*-*

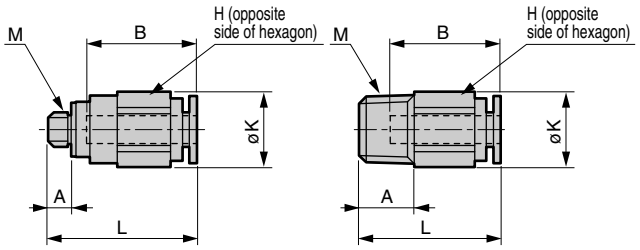


M5 type

| Model no. | Applicable tube O.D.ø | M | H | K | L | A | B | Min. bore size | Effective sectional area mm² |
|---|---|---|---|---|---|---|---|---|---|
| GWS 4-M5 | 4 | M5×0.8 | 10 | 11 | 21.5 | 3.4 | 16 | 2.5 | 4 |
| GWS 4- 6 | | R1/8 | 10 | 11 | 20.5 | 8 | 16 | 2.5 | 4 |
| GWS 4- 8 | | R1/4 | 14 | 15.8 | 19.5 | 11 | 16 | 2.5 | 4 |
| GWS 6-M5 | 6 | M5×0.8 | 12 | 13.5 | 23 | 3.4 | 17.5 | 2.5 | 4.4 |
| GWS 6- 6 | | R1/8 | 12 | 13.5 | 23 | 8 | 17.5 | 4 | 10.3 |
| GWS 6- 8 | | R1/4 | 14 | 15.8 | 23.5 | 11 | 17.5 | 4 | 10.3 |
| GWS 6-10 | | R3/8 | 17 | 19.1 | 21.5 | 12 | 17.5 | 4 | 10.3 |
| GWS 8- 6 | 8 | R1/8 | 14 | 15.8 | 28 | 8 | 19 | 5 | 17.5 |
| GWS 8- 8 | | R1/4 | 14 | 15.8 | 27 | 11 | 19 | 6 | 22.4 |
| GWS 8-10 | | R3/8 | 17 | 19.1 | 22.5 | 12 | 19 | 6 | 22.4 |
| GWS10- 6 | 10 | R1/8 | 17 | 19.1 | 31 | 8 | 21.5 | 5 | 17.5 |
| GWS10- 8 | | R1/4 | 17 | 19.1 | 32.5 | 11 | 21.5 | 8 | 30.5 |
| GWS10-10 | | R3/8 | 17 | 19.1 | 28.5 | 12 | 21.5 | 8 | 30.5 |
| GWS10-15 | | R1/2 | 22 | 24 | 26.5 | 15 | 21.5 | 8 | 30.5 |
| GWS12- 8 | 12 | R1/4 | 19 | 21.4 | 35.5 | 11 | 23 | 8 | 35.5 |
| GWS12-10 | | R3/8 | 19 | 21.4 | 30.5 | 12 | 23 | 10 | 40 |
| GWS12-15 | | R1/2 | 22 | 24 | 29.5 | 15 | 23 | 10 | 40 |
| GWS16-10 | 16 | R3/8 | 24 | 26.5 | 42 | 12 | 28 | 12 | 90 |
| GWS16-15 | | R1/2 | 24 | 26.5 | 37.5 | 15 | 28 | 13 | 90 |

## Single straight (round)

● GWS*-*-S

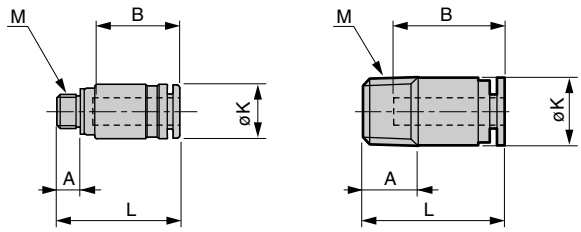


M3,M5 type

| Model no. | Applicable tube O.D.ø | M | K | L | A | B | Hexagon head hole diameter | Effective sectional area mm² |
|---|---|---|---|---|---|---|---|---|
| GWS 3-M3-S | 3.2 | M3×0.5 | 6.9 | 15.7 | 2.4 | 11.7 | 1.5 | 1.4 |
| GWS 3-M5-S | | M5×0.8 | 6.9 | 16.7 | 3.4 | 11.7 | 2 | 2.7 |
| GWS 4-M3-S | 4 | M3×0.5 | 7.9 | 16.9 | 2.4 | 12.9 | 1.5 | 1.6 |
| GWS 4-M5-S | | M5×0.8 | 7.9 | 17.9 | 3.4 | 12.9 | 2 | 2.7 |
| GWS 4- 6-S | | R1/8 | 9.8 | 20.5 | 8 | 16 | 2.5 | 4.1 |
| GWS 6-M5-S | 6 | M5×0.8 | 9.9 | 19.2 | 3.4 | 14.2 | 2.5 | 4.4 |
| GWS 6- 6-S | | R1/8 | 11.8 | 23 | 8 | 17.5 | 4 | 10.6 |
| GWS 6- 8-S | | R1/4 | 13.8 | 23 | 11 | 17.5 | 4 | 10.6 |
| GWS 8- 6-S | 8 | R1/8 | 14 | 28 | 8 | 19 | 5 | 20.4 |
| GWS 8- 8-S | | R1/4 | 14 | 27 | 11 | 19 | 6 | 22 |
| GWS 8-10-S | | R3/8 | 17 | 22.5 | 12 | 19 | 6 | 22 |
| GWS10- 6-S | 10 | R1/8 | 17.5 | 30.5 | 8 | 21.5 | 5 | 20.1 |
| GWS10- 8-S | | R1/4 | 17.5 | 28.5 | 11 | 21.5 | 6 | 26.3 |
| GWS10-10-S | | R3/8 | 17.5 | 28.5 | 12 | 21.5 | 8 | 30.1 |
| GWS10-15-S | | R1/2 | 22 | 26.5 | 15 | 21.5 | 8 | 30.1 |
| GWS12- 8-S | 12 | R1/4 | 19.5 | 34 | 11 | 23 | 6 | 26.3 |
| GWS12-10-S | | R3/8 | 19.5 | 29.5 | 12 | 23 | 8 | 37.9 |
| GWS12-15-S | | R1/2 | 22 | 28.5 | 15 | 23 | 8 | 37.9 |

## Female straight

● GWS*-*-M

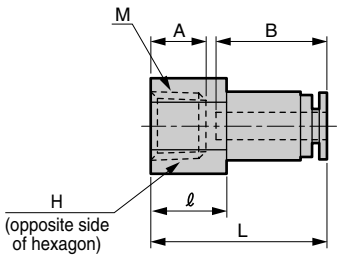


| Model no. | Applicable tube O.D.ø | M | H | L | ℓ | A | B | Min. bore size | Effective sectional area mm² |
|---|---|---|---|---|---|---|---|---|---|
| GWS 4- 6-M | 4 | Rc1/8 | 12 | 25.5 | 11 | 8 | 16 | 2.5 | 4 |
| GWS 4- 8-M | | Rc1/4 | 17 | 28.5 | 14 | 11 | 16 | 2.5 | 4 |
| GWS 6- 6-M | 6 | Rc1/8 | 14 | 27 | 11 | 8 | 17.5 | 4 | 10.3 |
| GWS 6- 8-M | | Rc1/4 | 17 | 30 | 14 | 11 | 17.5 | 4 | 10.3 |
| GWS 6-10-M | | Rc3/8 | 19 | 31 | 15 | 12 | 17.5 | 4 | 10.3 |
| GWS 8- 6-M | 8 | Rc1/8 | 17 | 28.5 | 11 | 8 | 19 | 6 | 22.4 |
| GWS 8- 8-M | | Rc1/4 | 17 | 31.5 | 14 | 11 | 19 | 6 | 22.4 |
| GWS 8-10-M | | Rc3/8 | 19 | 32.5 | 15 | 12 | 19 | 6 | 22.4 |
| GWS10- 8-M | 10 | Rc1/4 | 19 | 34.5 | 14 | 11 | 21.5 | 8 | 30.5 |
| GWS10-10-M | | Rc3/8 | 19 | 35.5 | 15 | 12 | 21.5 | 8 | 30.5 |
| GWS12- 8-M | 12 | Rc1/4 | 22 | 36 | 14 | 11 | 23 | 10 | 35.5 |
| GWS12-10-M | | Rc3/8 | 22 | 37 | 15 | 12 | 23 | 10 | 35.5 |
| GWS12-15-M | | Rc1/2 | 24 | 40 | 18 | 15 | 23 | 10 | 35.5 |

## Bulk head female

● GWS*-*-E

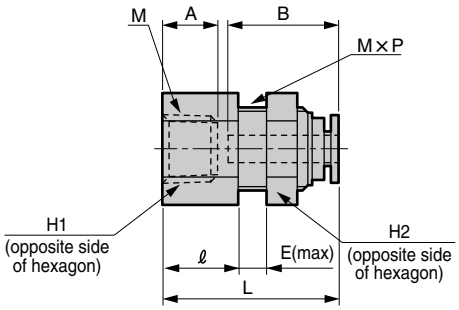


| Model no. | Applicable tube O.D.ø | M | H1 | H2 | L | ℓ | A | B | E | M×P | Hexagon hole dia. | Min. hole dia. | Effective sectional area mm² |
|---|---|---|---|---|---|---|---|---|---|---|---|---|---|
| GWS 4- 6-E | 4 | Rc1/8 | 14 | 14 | 25.5 | 11 | 8 | 16 | 5 | M12×1 | 13 | 2.5 | 4 |
| GWS 4- 8-E | | Rc1/4 | 17 | 14 | 28.5 | 14 | 11 | 16 | 5 | M12×1 | 13 | 2.5 | 4 |
| GWS 6- 6-E | 6 | Rc1/8 | 17 | 17 | 27 | 11 | 8 | 17.5 | 5 | M14×1 | 15 | 4 | 10.3 |
| GWS 6- 8-E | | Rc1/4 | 17 | 17 | 30 | 14 | 11 | 17.5 | 5 | M14×1 | 15 | 4 | 10.3 |
| GWS 6-10-E | | Rc3/8 | 19 | 17 | 31.5 | 15 | 12 | 17.5 | 5 | M14×1 | 15 | 4 | 10.3 |
| GWS 8- 6-E | 8 | Rc1/8 | 19 | 19 | 28.5 | 11 | 8 | 19 | 6 | M16×1 | 17 | 6 | 22.4 |
| GWS 8- 8-E | | Rc1/4 | 19 | 19 | 31.5 | 14 | 11 | 19 | 6 | M16×1 | 17 | 6 | 22.4 |
| GWS 8-10-E | | Rc3/8 | 19 | 19 | 32.5 | 15 | 12 | 19 | 6 | M16×1 | 17 | 6 | 22.4 |
| GWS10- 8-E | 10 | Rc1/4 | 22 | 23 | 34.5 | 14 | 11 | 21.5 | 9 | M20×1 | 21 | 8 | 30.5 |
| GWS10-10-E | | Rc3/8 | 22 | 23 | 35.5 | 15 | 12 | 21.5 | 9 | M20×1 | 21 | 8 | 30.5 |
| GWS12-10-E | 12 | Rc3/8 | 24 | 26 | 37.5 | 15 | 12 | 23 | 10 | M22×1 | 23 | 9 | 35.5 |
| GWS12-15-E | | Rc1/2 | 24 | 26 | 40.5 | 18 | 15 | 23 | 10 | M22×1 | 23 | 9 | 35.5 |

# Dimensions: Bulk head, bulk head female connector, straight, different diameter straight

CAD



Bulk head

● GWS*-*-X

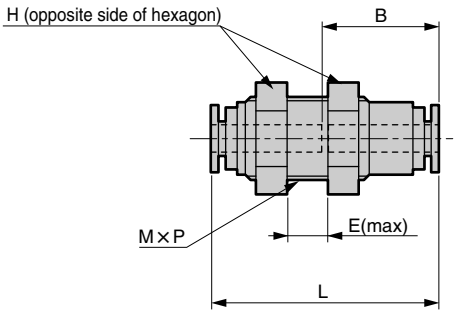


Bulk head female connector

● GWM*-*-X

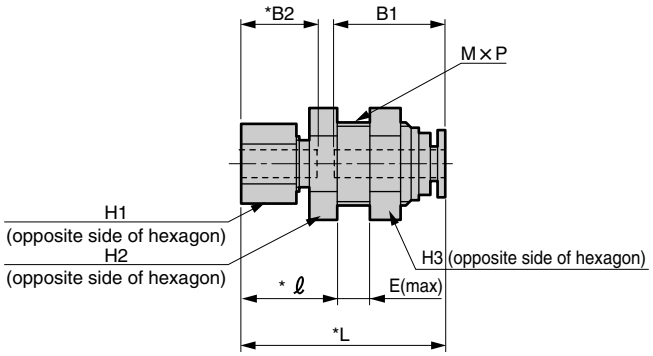


Note: An insert ring (MJU) is required for urethane tube on tightening joint side.
* dimension shows a rough dimension before tightening a nut.

| Model no. | Applicable tube O.D.ø | H | L | B | E | M×P | Installation hole dia. | Min. bore size | Effective sectional area mm² |
|---|---|---|---|---|---|---|---|---|---|
| GWS 4-0-X | 4 | 14 | 33 | 16 | 7.5 | M12×1 | 13 | 2.5 | 4 |
| GWS 6-0-X | 6 | 17 | 36 | 17.5 | 9.5 | M14×1 | 15 | 4 | 10 |
| GWS 8-0-X | 8 | 19 | 39 | 19 | 12.5 | M16×1 | 17 | 6 | 22 |
| GWS10-0-X | 10 | 23 | 44.5 | 21.5 | 18 | M20×1 | 21 | 8 | 30 |
| GWS12-0-X | 12 | 26 | 47 | 23 | 20.5 | M22×1 | 23 | 9 | 35 |

| Model no. | Applicable tube O.D.ø | H1 | H2 | H3 | L | ℓ | B1 | B2 | E | M×P | Installation hole dia. | Min. hole dia. | Effective sectional area mm² |
|---|---|---|---|---|---|---|---|---|---|---|---|---|---|
| GWM 4-0-X | 4 | 10 | 14 | 14 | 29.5 | 15 | 16 | 11 | 5 | M12×1 | 13 | 2.5 | 4 |
| GWM 6-0-X | 6 | 12 | 17 | 17 | 33 | 16 | 17.5 | 11.5 | 5 | M14×1 | 15 | 4 | 10 |
| GWM 8-0-X | 8 | 14 | 19 | 19 | 35 | 17.5 | 19 | 13 | 6 | M16×1 | 17 | 6 | 22 |
| GWM10-0-X | 10 | 17 | 22 | 23 | 40 | 19.5 | 21.5 | 14.5 | 9 | M20×1 | 21 | 8 | 30 |
| GWM12-0-X | 12 | 19 | 24 | 26 | 43.5 | 21 | 23 | 16 | 10 | M22×1 | 23 | 9 | 35 |

Straight

● GWS*-0

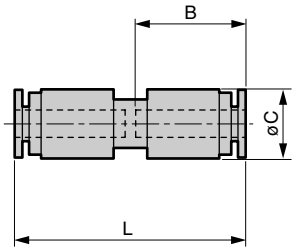


Different diameter straight

● GWS*-0

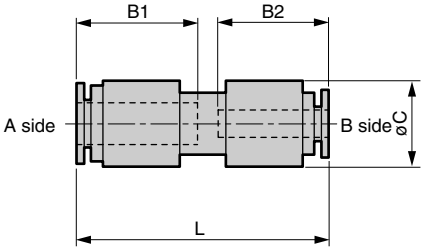


| Model no. | Applicable tube O.D.ø | L | B | C | Min. bore size | Effective sectional area mm² |
|---|---|---|---|---|---|---|
| GWS 4-0 | 4 | 33.5 | 16 | 10 | 2.5 | 4 |
| GWS 6-0 | 6 | 36.5 | 17.5 | 12.5 | 4 | 10 |
| GWS 8-0 | 8 | 39.5 | 19 | 14.5 | 6 | 22 |
| GWS10-0 | 10 | 45 | 21.5 | 17.5 | 8 | 30 |
| GWS12-0 | 12 | 47.5 | 23 | 20 | 10 | 35 |
| GWS16-0 | 16 | 58 | 28 | 26.5 | 13.2 | 90 |

| Model no. | Applicable tube O.D.ø | | L | B1 | B2 | C | Min. bore size | Effective sectional area mm² |
|---|---|---|---|---|---|---|---|---|
| | A side | B side | | | | | | |
| GWS 46-0 | 6 | 4 | 36.5 | 17.5 | 16 | 12.5 | 2.5 | 4 |
| GWS 68-0 | 8 | 6 | 39.5 | 19 | 17.5 | 14.5 | 4 | 10 |
| GWS 810-0 | 10 | 8 | 45 | 21.5 | 19 | 17.5 | 6 | 22 |
| GWS1012-0 | 12 | 10 | 47.5 | 23 | 21.5 | 20 | 8 | 30 |

Refrigerating type dryer
Desiccant type dryer
High polymer membrane type dryer
Air filter
Auto. drain / others
F.R.L. (Module unit)
F.R.L. (Separate)
Compact F.R.
Precise regulator
F.R.L. (Related products)
Clean F.R.
Electro pneumatic regulator
Air booster
Speed control valve
Silencer
Check valve / others
Joint / tube
Vacuum filter
Vacuum regulator
Suction plate
Magnetic spring buffer
Mechanical pressure SW
Electronic pressure SW
Contact / close contact cont. SW
Air sensor
Pressure SW for coolant
Small flow sensor
Small flow controller
Flow sensor for air
Flow sensor for water
Total air system
Total air system (Gamma)
Ending

## Dimensions: Plug reducer, plug, plug reducer, single elbow

CAD

Plug reducer

● GWS*-*-P

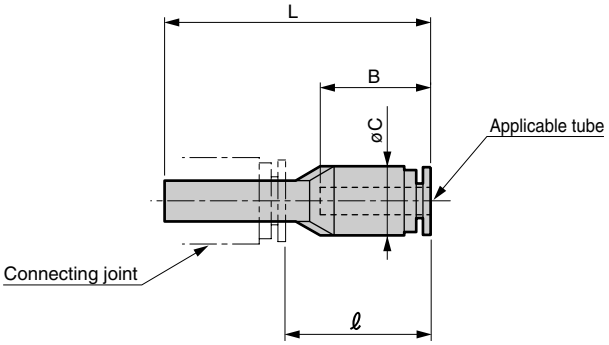


| Model no. | Applicable tube O.D. ø | Connecting joint diameter ø | L | ℓ* | B | C | Min. bore size | Effective sectional area mm² |
|---|---|---|---|---|---|---|---|---|
| GWS 4- 6P | 4 | 6 | 38.5 | 21 | 16 | 10 | 2.3 | 3.5 |
| GWS 6- 4P | 6 | 4 | 42 | 26 | 17.5 | 12.5 | 2.3 | 3.5 |
| GWS 6- 8P | | 8 | 41 | 22 | 17.5 | 12.5 | 4 | 10 |
| GWS 6-10P | | 10 | 42 | 20 | 17.5 | 12.5 | 4 | 10 |
| GWS 8-10P | 8 | 10 | 44.5 | 22.5 | 19 | 14.5 | 6 | 22 |
| GWS 8-12P | | 12 | 44 | 21 | 19 | 14.5 | 6 | 22 |
| GWS10-12P | 10 | 12 | 48 | 25 | 21.5 | 17.5 | 8 | 30 |

* For connecting joint, dimension of CKD (GW Series) are shown.

Plug

● GWP*-0

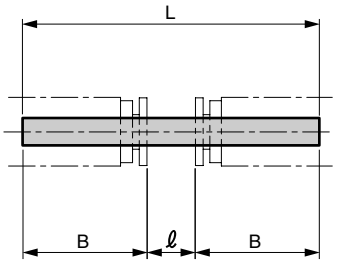


Material: Polyamide resin

| Model no. | Connecting joint diameter ø | L | B* | ℓ* | Min. bore size | Effective sectional area mm² |
|---|---|---|---|---|---|---|
| GWP 4-0 | 4 | 43 | 16 | 11 | 2.5 | 4 |
| GWP 6-0 | 6 | 43 | 17.5 | 8 | 4 | 10.3 |
| GWP 8-0 | 8 | 47 | 19 | 9 | 6 | 22.4 |
| GWP10-0 | 10 | 56 | 21.5 | 13 | 7.5 | 30 |
| GWP12-0 | 12 | 61 | 23 | 15 | 9.2 | 35.5 |

* For connecting joint, dimension of CKD (GW Series) are shown.

Plug reducer

● GWP*-0

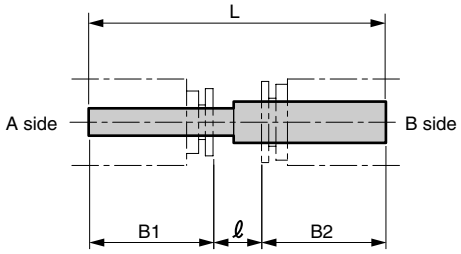


Material: Polyamide resin

| Model no. | Joint port size ø | | L | ℓ* | B1* | B2* | Min. bore size | Effective sectional area mm² |
|---|---|---|---|---|---|---|---|---|
| | A side | B side | | | | | | |
| GWP 46-0 | 4 | 6 | 43 | 9.5 | 16 | 17.5 | 2.3 | 4 |
| GWP 68-0 | 6 | 8 | 45 | 8.5 | 17.5 | 19 | 4 | 10.3 |
| GWP 810-0 | 8 | 10 | 50.5 | 10 | 19 | 21.5 | 6 | 22.4 |
| GWP1012-0 | 10 | 12 | 58 | 13.5 | 21.5 | 23 | 7.5 | 30 |

* For connecting joint, dimension of CKD (GW Series) are shown.

Single elbow

● GWL*-*

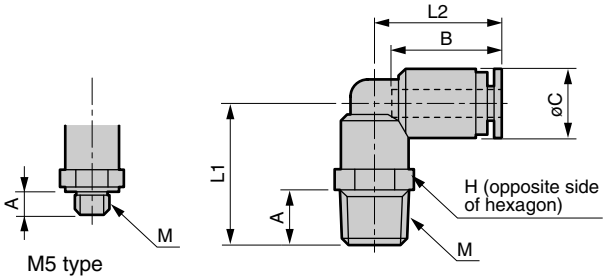


| Model no. | Applicable tube O.D. ø | M | H | L1 | L2 | A | B | C | Min. bore size | Effective sectional area mm² |
|---|---|---|---|---|---|---|---|---|---|---|
| GWL 4-M5 | 4 | M5×0.8 | 8 | 15 | 18 | 3.4 | 16 | 10 | 2.5 | 3.2 |
| GWL 4- 6 | | R1/8 | 10 | 20.5 | 18.5 | 8 | 16 | 10 | 2.5 | 3.2 |
| GWL 4- 8 | | R1/4 | 14 | 24 | 18.5 | 11 | 16 | 10 | 2.5 | 3.2 |
| GWL 6-M5 | 6 | M5×0.8 | 10 | 15 | 20 | 3.4 | 17.5 | 12.5 | 2.5 | 4.2 |
| GWL 6- 6 | | R1/8 | 12 | 24 | 21 | 8 | 17.5 | 12.5 | 4 | 8 |
| GWL 6- 8 | | R1/4 | 14 | 27.5 | 21 | 11 | 17.5 | 12.5 | 4 | 8 |
| GWL 6-10 | | R3/8 | 17 | 29 | 21 | 12 | 17.5 | 12.5 | 4 | 8 |
| GWL 8- 6 | 8 | R1/8 | 14 | 25.5 | 23.5 | 8 | 19 | 14.5 | 6 | 18 |
| GWL 8- 8 | | R1/4 | 14 | 28.5 | 23.5 | 11 | 19 | 14.5 | 6 | 18 |
| GWL 8-10 | | R3/8 | 17 | 30 | 23.5 | 12 | 19 | 14.5 | 6 | 18 |
| GWL10- 6 | 10 | R1/8 | 17 | 28 | 27 | 8 | 21.5 | 17.5 | 6.5 | 24.3 |
| GWL10- 8 | | R1/4 | 17 | 31 | 27 | 11 | 21.5 | 17.5 | 8 | 27 |
| GWL10-10 | | R3/8 | 17 | 32.5 | 27 | 12 | 21.5 | 17.5 | 8 | 27 |
| GWL10-15 | | R1/2 | 22 | 35.5 | 27 | 15 | 21.5 | 17.5 | 8 | 27 |
| GWL12- 8 | 12 | R1/4 | 19 | 33 | 29.5 | 11 | 23 | 20 | 8.5 | 33 |
| GWL12-10 | | R3/8 | 19 | 34.5 | 29.5 | 12 | 23 | 20 | 9 | 35 |
| GWL12-15 | | R1/2 | 22 | 37.5 | 29.5 | 15 | 23 | 20 | 9 | 35.5 |
| GWL16-10 | 16 | R3/8 | 22 | 41 | 35.5 | 12 | 28 | 26.5 | 12 | 80 |
| GWL16-15 | | R1/2 | 22 | 44 | 35.5 | 15 | 28 | 26.5 | 12 | 80 |

## Dimensions:Long elbow, single 45˚ elbow, turn elbow, elbow

CAD

### Long elbow

● GWL*-*-L

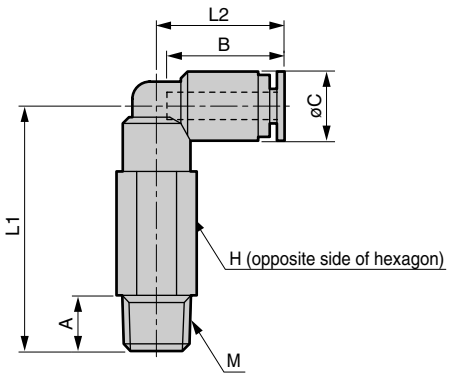


| Model no. | Applicable tube O.D. ø | M | H | L1 | L2 | A | B | C | Min. bore size | Effective sectional area mm² |
|---|---|---|---|---|---|---|---|---|---|---|
| GWL 4- 6-L | 4 | R1/8 | 10 | 35.5 | 18.5 | 8 | 16 | 10 | 2.5 | 3.2 |
| GWL 4- 8-L | | R1/4 | 14 | 39 | 18.5 | 11 | 16 | 10 | 2.5 | 3.2 |
| GWL 6- 6-L | 6 | R1/8 | 12 | 40 | 21 | 8 | 17.5 | 12.5 | 4 | 8 |
| GWL 6- 8-L | | R1/4 | 14 | 43.5 | 21 | 11 | 17.5 | 12.5 | 4 | 8 |
| GWL 8- 6-L | 8 | R1/8 | 14 | 44.5 | 23.5 | 8 | 19 | 14.5 | 6 | 18 |
| GWL 8- 8-L | | R1/4 | 14 | 47.5 | 23.5 | 11 | 19 | 14.5 | 6 | 18 |
| GWL 8-10-L | | R3/8 | 17 | 49 | 23.5 | 12 | 19 | 14.5 | 6 | 18 |
| GWL10- 8-L | 10 | R1/4 | 17 | 56 | 27 | 11 | 21.5 | 17.5 | 8 | 27 |
| GWL10-10-L | | R3/8 | 17 | 57.5 | 27 | 12 | 21.5 | 17.5 | 8 | 27 |
| GWL10-15-L | | R1/2 | 22 | 60.5 | 27 | 15 | 21.5 | 17.5 | 8 | 27 |
| GWL12- 8-L | 12 | R1/4 | 19 | 60 | 29.5 | 11 | 23 | 20 | 8.5 | 33 |
| GWL12-10-L | | R3/8 | 19 | 61.5 | 29.5 | 12 | 23 | 20 | 9 | 34.5 |
| GWL12-15-L | | R1/2 | 22 | 64.5 | 29.5 | 15 | 23 | 20 | 9 | 34.5 |

### Single 45˚ Elbow

● GWL*-*-45

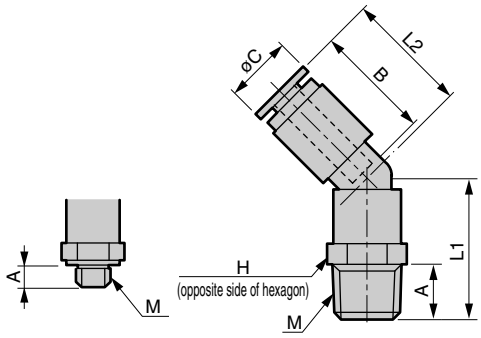


| Model no. | Applicable tube O.D. ø | M | H | L1 | L2 | A | B | C | Min. bore size | Effective sectional area mm² |
|---|---|---|---|---|---|---|---|---|---|---|
| GWL 4-M5-45 | 4 | M5×0.8 | 8 | 14.5 | 18 | 3.4 | 16 | 10 | 2.5 | 3.6 |
| GWL 4- 6-45 | | R1/8 | 10 | 20.5 | 18 | 8 | 16 | 10 | 2.5 | 3.6 |
| GWL 4- 8-45 | | R1/4 | 14 | 24 | 18 | 11 | 16 | 10 | 2.5 | 3.6 |
| GWL 6-M5-45 | 6 | M5×0.8 | 10 | 15 | 18.5 | 3.4 | 17.5 | 12.5 | 2.5 | 4.3 |
| GWL 6- 6-45 | | R1/8 | 12 | 23.5 | 20 | 8 | 17.5 | 12.5 | 4 | 9.2 |
| GWL 6- 8-45 | | R1/4 | 14 | 27 | 20 | 11 | 17.5 | 12.5 | 4 | 9.2 |
| GWL 6-10-45 | | R3/8 | 17 | 28.5 | 20 | 12 | 17.5 | 12.5 | 4 | 9.2 |
| GWL 8- 6-45 | 8 | R1/8 | 14 | 25 | 22 | 8 | 19 | 14.5 | 6 | 20 |
| GWL 8- 8-45 | | R1/4 | 14 | 28 | 22 | 11 | 19 | 14.5 | 6 | 20 |
| GWL 8-10-45 | | R3/8 | 17 | 29.5 | 22 | 12 | 19 | 14.5 | 6 | 20 |
| GWL10- 6-45 | 10 | R1/8 | 17 | 26 | 25 | 8 | 21.5 | 17.5 | 6.5 | 25.5 |
| GWL10- 8-45 | | R1/4 | 17 | 29 | 25 | 11 | 21.5 | 17.5 | 8 | 29 |
| GWL10-10-45 | | R3/8 | 17 | 30.5 | 25 | 12 | 21.5 | 17.5 | 8 | 29 |
| GWL10-15-45 | | R1/2 | 22 | 33.5 | 25 | 15 | 21.5 | 17.5 | 8 | 29 |
| GWL12- 8-45 | 12 | R1/4 | 19 | 30.5 | 27 | 11 | 23 | 20 | 8.5 | 35.5 |
| GWL12-10-45 | | R3/8 | 19 | 32 | 27 | 12 | 23 | 20 | 9 | 39 |
| GWL12-15-45 | | R1/2 | 22 | 35 | 27 | 15 | 23 | 20 | 9 | 39 |

### Turn elbow

● GWL*-*-T

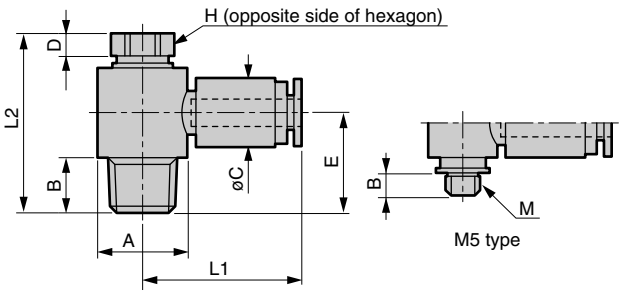


| Model no. | Applicable tube O.D. ø | M | H | L1 | L2 | A | B | C | D | E | Effective sectional area mm² |
|---|---|---|---|---|---|---|---|---|---|---|---|
| GWL 4-M5-T | 4 | M5×0.8 | 8 | 21.5 | 18.5 | 10 | 3.4 | 10 | 3 | 10.5 | 2.8 |
| GWL 4- 6-T | | R1/8 | 8 | 23 | 26 | 13 | 8 | 10 | 3 | 15 | 3.7 |
| GWL 4- 8-T | | R1/4 | 10 | 24 | 30 | 15 | 11 | 10 | 3.5 | 18 | 3.7 |
| GWL 6-M5-T | 6 | M5×0.8 | 8 | 22.5 | 18.5 | 10 | 3.4 | 12.5 | 3 | 10.5 | 3.4 |
| GWL 6- 6-T | | R1/8 | 8 | 24 | 26 | 13 | 8 | 12.5 | 3 | 15 | 7.5 |
| GWL 6- 8-T | | R1/4 | 10 | 25 | 30 | 15 | 11 | 12.5 | 3.5 | 18 | 8 |
| GWL 6-10-T | | R3/8 | 14 | 27.5 | 36.5 | 20 | 12 | 12.5 | 4 | 21.5 | 9 |
| GWL 8- 6-T | 8 | R1/8 | 10 | 26.5 | 29 | 15 | 8 | 14.5 | 4 | 16 | 16.5 |
| GWL 8- 8-T | | R1/4 | 12 | 28 | 32 | 17.6 | 11 | 14.5 | 4 | 19 | 17 |
| GWL 8-10-T | | R3/8 | 14 | 29 | 36.5 | 20 | 12 | 14.5 | 4 | 21.5 | 19 |
| GWL10- 8-T | 10 | R1/4 | 14 | 31.5 | 35.5 | 20 | 11 | 17.5 | 4 | 20.5 | 24 |
| GWL10-10-T | | R3/8 | 14 | 31.5 | 36.5 | 20 | 12 | 17.5 | 4 | 21.5 | 24 |
| GWL10-15-T | | R1/2 | 17 | 34 | 42.5 | 25 | 15 | 17.5 | 4 | 25.7 | 27 |
| GWL12- 8-T | 12 | R1/4 | 17 | 35.5 | 38.5 | 25 | 11 | 20 | 4 | 21.7 | 32 |
| GWL12-10-T | | R3/8 | 17 | 35.5 | 39.5 | 25 | 12 | 20 | 4 | 22.7 | 32 |
| GWL12-15-T | | R1/2 | 17 | 35.5 | 42.5 | 25 | 15 | 20 | 4 | 25.7 | 32 |

### Elbow

● GWL*-0

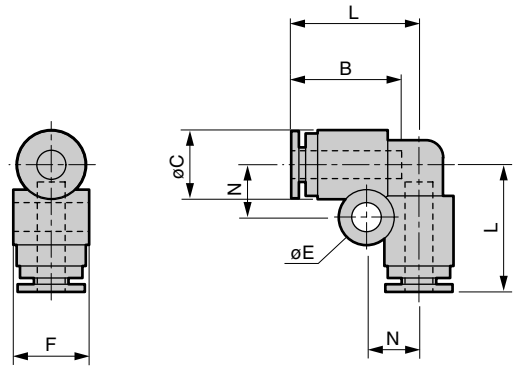


| Model no. | Applicable tube O.D. ø | L | B | C | N | E | F | Min. bore size | Effective sectional area mm² |
|---|---|---|---|---|---|---|---|---|---|
| GWL 4-0 | 4 | 18.5 | 16 | 10 | 7.5 | 4.2 | 11 | 2.5 | 3 |
| GWL 6-0 | 6 | 21 | 17.5 | 12.5 | 8.5 | 4.2 | 13.5 | 4 | 7.5 |
| GWL 8-0 | 8 | 23.5 | 19 | 14.5 | 9.5 | 4.2 | 15.5 | 6 | 17 |
| GWL10-0 | 10 | 27 | 21.5 | 17.5 | 11 | 4.2 | 18.5 | 8 | 25.5 |
| GWL12-0 | 12 | 29.5 | 23 | 20 | 12 | 4.2 | 21 | 10 | 34 |
| GWL16-0 | 16 | 37 | 28 | 26.5 | 12.5 | 4.2 | 28 | 13.2 | 80 |

Refrigerating type dryer
Desiccant type dryer
High polymer membrane type dryer
Air filter
Auto. drain / others
F.R.L. (Module unit)
F.R.L. (Separate)
Compact F.R.
Precise regulator
F.R.L. (Related products)
Clean F.R.
Electro pneumatic regulator
Air booster
Speed control valve
Silencer
Check valve / others
Joint / tube
Vacuum filter
Vacuum regulator
Suction plate
Magnetic spring buffer
Mechanical pressure SW
Electronic pressure SW
Contact / close contact cont. SW
Air sensor
Pressure SW for coolant
Small flow sensor
Small flow controller
Flow sensor for air
Flow sensor for water
Total air system
Total air system (Gamma)
Ending

## Dimensions: Both push-in branch, D type union Tee, Union Tee, Y type union Tee

### Both push-in branch

● GWT*-*

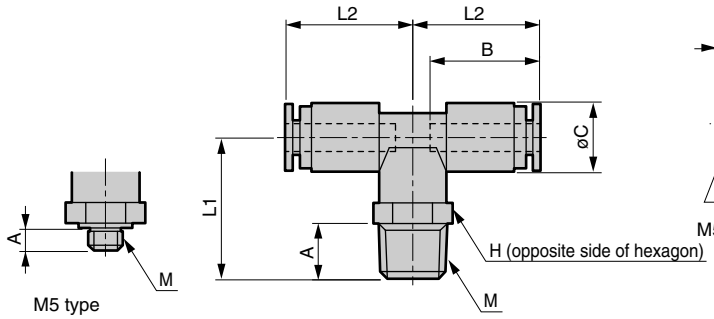


| Model no. | Applicable tube O.D. ø | M | H | L1 | L2 | A | B | C | Min. bore size | Effective sectional area mm² |
|---|---|---|---|---|---|---|---|---|---|---|
| GWT 4-M5 | 4 | M5×0.8 | 10 | 16.5 | 18.5 | 3.4 | 16 | 10 | 2.5 | 4.3 |
| GWT 4- 6 | | R1/8 | 10 | 20.5 | 18.5 | 8 | 16 | 10 | 2.5 | 4.3 |
| GWT 4- 8 | | R1/4 | 14 | 24 | 18.5 | 11 | 16 | 10 | 2.5 | 4.3 |
| GWT 6-M5 | 6 | M5×0.8 | 12 | 20 | 21 | 3.4 | 17.5 | 12.5 | 2.5 | 4.3 |
| GWT 6- 6 | | R1/8 | 12 | 24 | 21 | 8 | 17.5 | 12.5 | 4 | 10.5 |
| GWT 6- 8 | | R1/4 | 14 | 27.5 | 21 | 11 | 17.5 | 12.5 | 4 | 10.5 |
| GWT 6-10 | | R3/8 | 17 | 29 | 21 | 12 | 17.5 | 12.5 | 4 | 10.5 |
| GWT 8- 6 | 8 | R1/8 | 14 | 25.5 | 23.5 | 8 | 19 | 14.5 | 6 | 23.5 |
| GWT 8- 8 | | R1/4 | 14 | 28.5 | 23.5 | 11 | 19 | 14.5 | 6 | 23.5 |
| GWT 8-10 | | R3/8 | 17 | 30 | 23.5 | 12 | 19 | 14.5 | 6 | 23.5 |
| GWT10- 8 | 10 | R1/4 | 17 | 31 | 27 | 11 | 21.5 | 17.5 | 8 | 33.5 |
| GWT10-10 | | R3/8 | 17 | 32.5 | 27 | 12 | 21.5 | 17.5 | 8 | 33.5 |
| GWT10-15 | | R1/2 | 22 | 35.5 | 27 | 15 | 21.5 | 17.5 | 8 | 33.5 |
| GWT12- 8 | 12 | R1/4 | 19 | 33 | 29.5 | 11 | 23 | 20 | 8.5 | 37 |
| GWT12-10 | | R3/8 | 19 | 34.5 | 29.5 | 12 | 23 | 20 | 9 | 41 |
| GWT12-15 | | R1/2 | 22 | 37.5 | 29.5 | 15 | 23 | 20 | 9 | 41 |

### D type union Tee

● GWT*-*-D

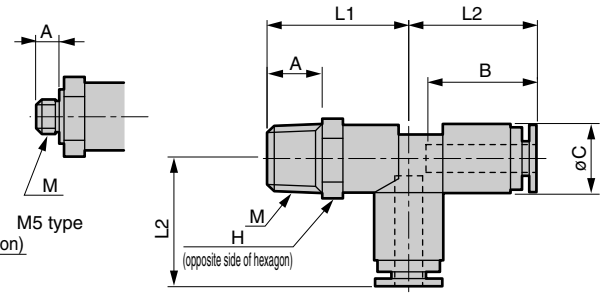


| Model no. | Applicable tube O.D. ø | M | H | L1 | L2 | A | B | C | Min. bore size | Effective sectional area mm² |
|---|---|---|---|---|---|---|---|---|---|---|
| GWT 4-M5-D | 4 | M5×0.8 | 10 | 16.5 | 18.5 | 3.4 | 16 | 10 | 2.5 | 4.3 |
| GWT 4- 6-D | | R1/8 | 10 | 20.5 | 18.5 | 8 | 16 | 10 | 2.5 | 4.3 |
| GWT 4- 8-D | | R1/4 | 14 | 24 | 18.5 | 11 | 16 | 10 | 2.5 | 4.3 |
| GWT 6-M5-D | 6 | M5×0.8 | 12 | 19.5 | 21 | 3.4 | 17.5 | 12.5 | 2.5 | 4.3 |
| GWT 6- 6-D | | R1/8 | 12 | 24 | 21 | 8 | 17.5 | 12.5 | 4 | 10.5 |
| GWT 6- 8-D | | R1/4 | 14 | 27.5 | 21 | 11 | 17.5 | 12.5 | 4 | 10.5 |
| GWT 6-10-D | | R3/8 | 17 | 29 | 21 | 12 | 17.5 | 12.5 | 4 | 10.5 |
| GWT 8- 6-D | 8 | R1/8 | 14 | 25.5 | 23.5 | 8 | 19 | 14.5 | 6 | 23.5 |
| GWT 8- 8-D | | R1/4 | 14 | 28.5 | 23.5 | 11 | 19 | 14.5 | 6 | 23.5 |
| GWT 8-10-D | | R3/8 | 17 | 30 | 23.5 | 12 | 19 | 14.5 | 6 | 23.5 |
| GWT10- 8-D | 10 | R1/4 | 17 | 31 | 27 | 11 | 21.5 | 17.5 | 8 | 33.5 |
| GWT10-10-D | | R3/8 | 17 | 32.5 | 27 | 12 | 21.5 | 17.5 | 8 | 33.5 |
| GWT10-15-D | | R1/2 | 22 | 35.5 | 27 | 15 | 21.5 | 17.5 | 8 | 33.5 |
| GWT12- 8-D | 12 | R1/4 | 19 | 33 | 29.5 | 11 | 23 | 20 | 8.5 | 37 |
| GWT12-10-D | | R3/8 | 19 | 34.5 | 29.5 | 12 | 23 | 20 | 9 | 41 |
| GWT12-15-D | | R1/2 | 22 | 37.5 | 29.5 | 15 | 23 | 20 | 9 | 41 |

### Union Tee

● GWT*-0

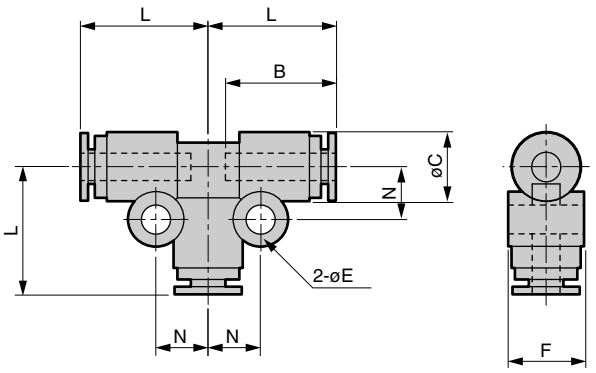


| Model no. | Applicable tube O.D. ø | L | B | C | E | F | N | Min. bore size | Effective sectional area mm² |
|---|---|---|---|---|---|---|---|---|---|
| GWT 4-0 | 4 | 18.5 | 16 | 10 | 4.2 | 11 | 7.5 | 2.5 | 3.6 |
| GWT 6-0 | 6 | 21 | 17.5 | 12.5 | 4.2 | 13.5 | 8.5 | 4 | 9.7 |
| GWT 8-0 | 8 | 23.5 | 19 | 14.5 | 4.2 | 15.5 | 9.5 | 6 | 22 |
| GWT10-0 | 10 | 27 | 21.5 | 17.5 | 4.2 | 18.5 | 11 | 8 | 30 |
| GWT12-0 | 12 | 29.5 | 23 | 20 | 4.2 | 21 | 12 | 10 | 35.5 |

### Y type union Tee

● GWY*-0

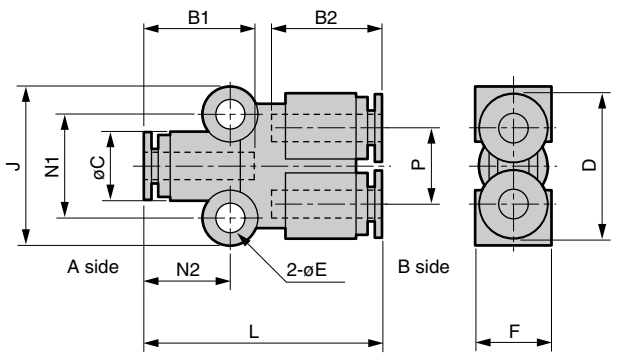


| Model no. | Applicable tube O.D. ø A side | Applicable tube O.D. ø B side | L | B1 | B2 | C | D | E | F | J | N1 | N2 | P | Effective sectional area mm² |
|---|---|---|---|---|---|---|---|---|---|---|---|---|---|---|
| GWY 44-0 | 4 | 4 | 34.5 | 16 | 16 | 10 | 21 | 4.2 | 11 | 23 | 15 | 12.5 | 11 | 3.6 |
| GWY 66-0 | 6 | 6 | 37.5 | 17.5 | 17.5 | 12.5 | 26 | 4.2 | 13.5 | 25.5 | 17.5 | 14 | 13.5 | 10.5 |
| GWY 88-0 | 8 | 8 | 40.5 | 19 | 19 | 14.5 | 30 | 4.2 | 15.5 | 27 | 19 | 15 | 15.5 | 23 |
| GWY1010-0 | 10 | 10 | 48 | 21.5 | 21.5 | 17.5 | 36 | 4.2 | 18.5 | 30 | 22 | 18 | 18.5 | 38 |
| GWY1212-0 | 12 | 12 | 53 | 23 | 23 | 20 | 41 | 4.2 | 21 | 32 | 24 | 19.5 | 21 | 50 |
| GWY 64-0 | 6 | 4 | 37.5 | 17.5 | 16 | 12.5 | 26 | 4.2 | 13.5 | 25.5 | 17.5 | 14 | 13.5 | 5.4 |
| GWY 86-0 | 8 | 6 | 40.5 | 19 | 17.5 | 14.5 | 30 | 4.2 | 15.5 | 27 | 19 | 15 | 15.5 | 14.3 |
| GWY 108-0 | 10 | 8 | 48 | 21.5 | 19 | 17.5 | 36 | 4.2 | 18.5 | 30 | 22 | 18 | 18.5 | 21.1 |
| GWY1210-0 | 12 | 10 | 53 | 23 | 21.5 | 20 | 41 | 4.2 | 21 | 32 | 24 | 19.5 | 21 | 35.5 |

## Dimensions: Both ports Y union Tee, cross shaped, 2 port turn elbow, tetrapod shaped (with R)

Both ports Y union Tee
● GWY*-*

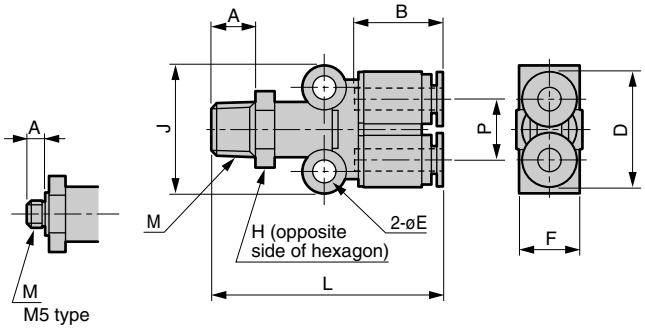


| Model no. | Applicable tube O.D. ø | M | H | L | A | B | D | E | F | J | P | Effective sectional area mm² |
|---|---|---|---|---|---|---|---|---|---|---|---|---|
| GWY 4-M5 | 4 | M5×0.8 | 12 | 38 | 3.4 | 16 | 21 | 4.2 | 11 | 23 | 11 | 4.5 |
| GWY 4- 6 | | R1/8 | 12 | 42 | 8 | 16 | 21 | 4.2 | 11 | 23 | 11 | 5.5 |
| GWY 4- 8 | | R1/4 | 14 | 45.5 | 11 | 16 | 21 | 4.2 | 11 | 23 | 11 | 5.5 |
| GWY 6-M5 | 6 | M5×0.8 | 14 | 41 | 3.4 | 17.5 | 26 | 4.2 | 13.5 | 25.5 | 13.5 | 4.5 |
| GWY 6- 6 | | R1/8 | 14 | 46 | 8 | 17.5 | 26 | 4.2 | 13.5 | 25.5 | 13.5 | 17.5 |
| GWY 6- 8 | | R1/4 | 14 | 49 | 11 | 17.5 | 26 | 4.2 | 13.5 | 25.5 | 13.5 | 17.5 |
| GWY 6-10 | | R3/8 | 17 | 50.5 | 12 | 17.5 | 26 | 4.2 | 13.5 | 25.5 | 13.5 | 17.5 |
| GWY 8- 6 | 8 | R1/8 | 17 | 49 | 8 | 19 | 30 | 4.2 | 15.5 | 27 | 15.5 | 25.5 |
| GWY 8- 8 | | R1/4 | 17 | 52 | 11 | 19 | 30 | 4.2 | 15.5 | 27 | 15.5 | 25.5 |
| GWY 8-10 | | R3/8 | 17 | 53.5 | 12 | 19 | 30 | 4.2 | 15.5 | 27 | 15.5 | 25.5 |
| GWY10- 8 | 10 | R1/4 | 19 | 59.5 | 11 | 21.5 | 36 | 4.2 | 18.5 | 30 | 18.5 | 35 |
| GWY10-10 | | R3/8 | 19 | 61 | 12 | 21.5 | 36 | 4.2 | 18.5 | 30 | 18.5 | 38.5 |
| GWY10-15 | | R1/2 | 22 | 64 | 15 | 21.5 | 36 | 4.2 | 18.5 | 30 | 18.5 | 38 |
| GWY12- 8 | 12 | R1/4 | 22 | 64.5 | 11 | 23 | 41 | 4.2 | 21 | 32 | 21 | 37 |
| GWY12-10 | | R3/8 | 22 | 66 | 12 | 23 | 41 | 4.2 | 21 | 32 | 21 | 37 |
| GWY12-15 | | R1/2 | 22 | 69 | 15 | 23 | 41 | 4.2 | 21 | 32 | 21 | 40.5 |

Cross shaped
● GWCR*-0

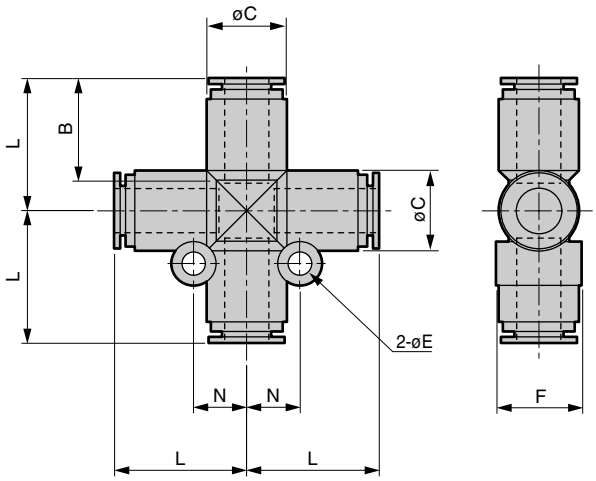


| Model no. | Applicable tube O.D. ø | L | B | C | E | F | N | Min. bore size | Effective sectional area mm² |
|---|---|---|---|---|---|---|---|---|---|
| GWCR 8-0 | 8 | 24 | 19 | 14.5 | 4.2 | 15.5 | 9.5 | 6 | 22 |
| GWCR10-0 | 10 | 27.5 | 21.5 | 17.5 | 4.2 | 18.5 | 11 | 8 | 30.5 |
| GWCR12-0 | 12 | 30 | 23 | 20 | 4.2 | 21 | 12 | 10 | 35.9 |

2 port turn elbow
● GWL*-*-2T

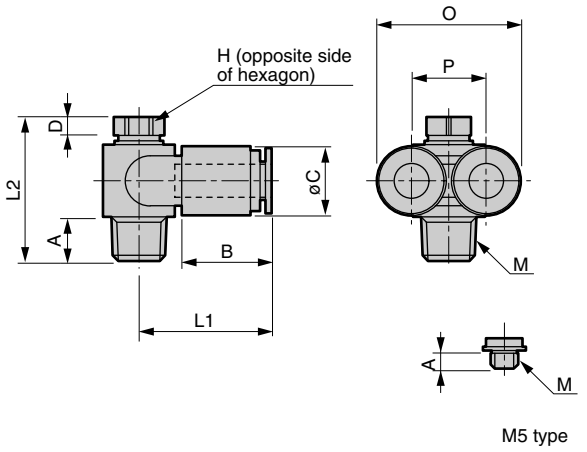


| Model no. | Applicable tube O.D. ø | M | H | L1 | L2 | A | B | C | D | O | P | Effective sectional area mm² |
|---|---|---|---|---|---|---|---|---|---|---|---|---|
| GWL 4-M5-2T | 4 | M5×0.8 | 8 | 21.5 | 18.5 | 3.4 | 16 | 10 | 3 | 21 | 11 | 3.6 |
| GWL 6- 6-2T | 6 | R1/8 | 8 | 24 | 26 | 8 | 17.5 | 12.5 | 3 | 26 | 13.5 | 8.5 |
| GWL 8- 8-2T | 8 | R1/4 | 12 | 28 | 32 | 11 | 19 | 14.5 | 4 | 30 | 15.5 | 19 |
| GWL10-10-2T | 10 | R3/8 | 14 | 31.5 | 36.5 | 12 | 21.5 | 17.5 | 4 | 36 | 18.5 | 26 |
| GWL12-15-2T | 12 | R1/2 | 17 | 35.5 | 42.5 | 15 | 23 | 20 | 4 | 41 | 21 | 34 |

Tetrapod shaped (with R)
● GWTR*-*

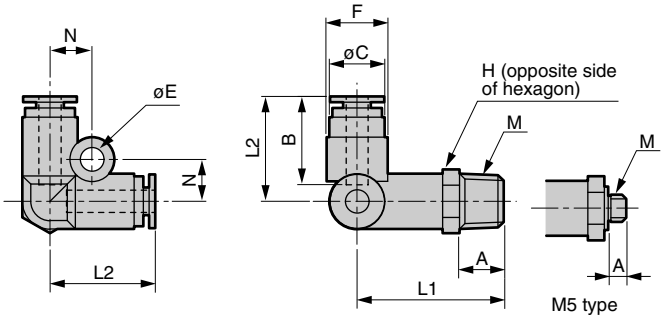


| Model no. | Applicable tube O.D. ø | M | H | L1 | L2 | A | B | C | E | F | N | Min. bore size | Effective sectional area mm² |
|---|---|---|---|---|---|---|---|---|---|---|---|---|---|
| GWTR 4-M5 | 4 | M5×0.8 | 10 | 22.5 | 19 | 3.4 | 16 | 10 | 4.2 | 11 | 7.5 | 2.5 | 4.3 |
| GWTR 4- 6 | | R1/8 | 10 | 26.5 | 19 | 8 | 16 | 10 | 4.2 | 11 | 7.5 | 2.5 | 4.5 |
| GWTR 4- 8 | | R1/4 | 14 | 30 | 19 | 11 | 16 | 10 | 4.2 | 11 | 7.5 | 2.5 | 4.5 |
| GWTR 6-M5 | 6 | M5×0.8 | 14 | 25 | 21.5 | 3.4 | 17.5 | 12.5 | 4.2 | 13.5 | 8.5 | 2.5 | 4.3 |
| GWTR 6- 6 | | R1/8 | 14 | 30 | 21.5 | 8 | 17.5 | 12.5 | 4.2 | 13.5 | 8.5 | 4 | 10.5 |
| GWTR 6- 8 | | R1/4 | 14 | 33 | 21.5 | 11 | 17.5 | 12.5 | 4.2 | 13.5 | 8.5 | 4 | 10.5 |
| GWTR 6-10 | | R3/8 | 17 | 34.5 | 21.5 | 12 | 17.5 | 12.5 | 4.2 | 13.5 | 8.5 | 4 | 10.5 |
| GWTR 8- 6 | 8 | R1/8 | 17 | 32.5 | 24 | 8 | 19 | 14.5 | 4.2 | 15.5 | 9.5 | 6 | 23.5 |
| GWTR 8- 8 | | R1/4 | 17 | 35.5 | 24 | 11 | 19 | 14.5 | 4.2 | 15.5 | 9.5 | 6 | 23.5 |
| GWTR 8-10 | | R3/8 | 17 | 37 | 24 | 12 | 19 | 14.5 | 4.2 | 15.5 | 9.5 | 6 | 23.5 |
| GWTR10- 8 | 10 | R1/4 | 19 | 39.5 | 27.5 | 11 | 21.5 | 17.5 | 4.2 | 18.5 | 13 | 8 | 35.5 |
| GWTR10-10 | | R3/8 | 19 | 41 | 27.5 | 12 | 21.5 | 17.5 | 4.2 | 18.5 | 13 | 8 | 35.5 |
| GWTR10-15 | | R1/2 | 22 | 44 | 27.5 | 15 | 21.5 | 17.5 | 4.2 | 18.5 | 13 | 8 | 35.5 |
| GWTR12- 8 | 12 | R1/4 | 22 | 41.5 | 30 | 11 | 23 | 20 | 4.2 | 21 | 14 | 8.5 | 37.5 |
| GWTR12-10 | | R3/8 | 22 | 43 | 30 | 12 | 23 | 20 | 4.2 | 21 | 14 | 8.5 | 37.5 |
| GWTR12-15 | | R1/2 | 22 | 46 | 30 | 15 | 23 | 20 | 4.2 | 21 | 14 | 8.5 | 37.5 |

Refrigerating type dryer
Desiccant type dryer
High polymer membrane type dryer
Air filter
Auto. drain / others
F.R.L. (Module unit)
F.R.L. (Separate)
Compact F.R.
Precise regulator
F.R.L. (Related products)
Clean F.R.
Electro pneumatic regulator
Air booster
Speed control valve
Silencer
Check valve / others
Joint / tube
Vacuum filter
Vacuum regulator
Suction plate
Magnetic spring buffer
Mechanical pressure SW
Electronic pressure SW
Contact / close contact cont. SW
Air sensor
Pressure SW for coolant
Small flow sensor
Small flow controller
Flow sensor for air
Flow sensor for water
Total air system
Total air system (Gamma)
Ending

## Dimensions: FY type (with R), double Y type (with R), terapod shaped, FY type

CAD

FY type(with R)

● GWFY*-*

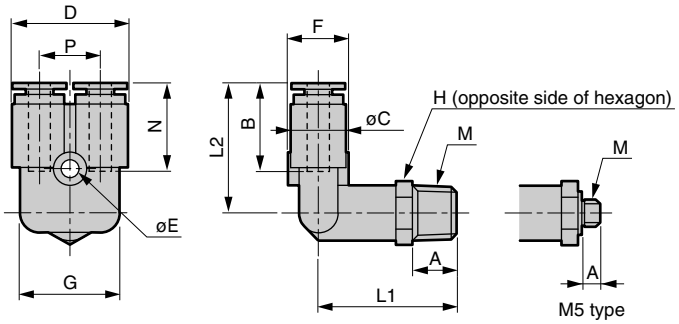


| Model no. | Applicable tube O.D. ø | M | H | L1 | L2 | A | B | C | D | E | F | G | N | P | Min. bore size | Effective sectional area mm² |
|---|---|---|---|---|---|---|---|---|---|---|---|---|---|---|---|---|
| GWFY 4-M5 | 4 | M5×0.8 | 10 | 21 | 23.5 | 3.4 | 16 | 10 | 21 | 3.2 | 11 | 18 | 15.5 | 11 | 2.5 | 4.5 |
| GWFY 4- 6 | | R1/8 | 10 | 25 | 23.5 | 8 | 16 | 10 | 21 | 3.2 | 11 | 18 | 15.5 | 11 | 2.5 | 4.6 |
| GWFY 4- 8 | | R1/4 | 14 | 28.5 | 23.5 | 11 | 16 | 10 | 21 | 3.2 | 11 | 18 | 15.5 | 11 | 2.5 | 4.6 |
| GWFY 6-M5 | 6 | M5×0.8 | 14 | 23 | 27 | 3.4 | 17.5 | 12.5 | 26 | 4.2 | 13.5 | 22.5 | 17 | 13.5 | 2.5 | 4.5 |
| GWFY 6- 6 | | R1/8 | 14 | 28 | 27 | 8 | 17.5 | 12.5 | 26 | 4.2 | 13.5 | 22.5 | 17 | 13.5 | 4 | 10.5 |
| GWFY 6- 8 | | R1/4 | 14 | 31 | 27 | 11 | 17.5 | 12.5 | 26 | 4.2 | 13.5 | 22.5 | 17 | 13.5 | 4 | 10.5 |
| GWFY 6-10 | | R3/8 | 17 | 32.5 | 27 | 12 | 17.5 | 12.5 | 26 | 4.2 | 13.5 | 22.5 | 17 | 13.5 | 4 | 10.5 |
| GWFY 8- 6 | 8 | R1/8 | 17 | 30.5 | 29 | 8 | 19 | 14.5 | 30 | 4.2 | 15.5 | 26.5 | 18 | 15.5 | 6 | 23 |
| GWFY 8- 8 | | R1/4 | 17 | 33.5 | 29 | 11 | 19 | 14.5 | 30 | 4.2 | 15.5 | 26.5 | 18 | 15.5 | 6 | 23 |
| GWFY 8-10 | | R3/8 | 17 | 35 | 29 | 12 | 19 | 14.5 | 30 | 4.2 | 15.5 | 26.5 | 18 | 15.5 | 6 | 23 |
| GWFY10- 8 | 10 | R1/4 | 19 | 37.5 | 33 | 11 | 21.5 | 17.5 | 36 | 4.2 | 18.5 | 31.5 | 20 | 18.5 | 8 | 34.4 |
| GWFY10-10 | | R3/8 | 19 | 39 | 33 | 12 | 21.5 | 17.5 | 36 | 4.2 | 18.5 | 31.5 | 20 | 18.5 | 8 | 34.4 |
| GWFY10-15 | | R1/2 | 22 | 42 | 33 | 15 | 21.5 | 17.5 | 36 | 4.2 | 18.5 | 32.5 | 20 | 18.5 | 8 | 34.4 |
| GWFY12- 8 | 12 | R1/4 | 22 | 39.5 | 35.5 | 11 | 23 | 20 | 41 | 4.2 | 21 | 37 | 21.5 | 21 | 8.5 | 37.5 |
| GWFY12-10 | | R3/8 | 22 | 41 | 35.5 | 12 | 23 | 20 | 41 | 4.2 | 21 | 37 | 21.5 | 21 | 8.5 | 37.5 |
| GWFY12-15 | | R1/2 | 22 | 44 | 35.5 | 15 | 23 | 20 | 41 | 4.2 | 21 | 37 | 21.5 | 21 | 8.5 | 37.5 |

Double Y types(with R)

● GWWY*-*

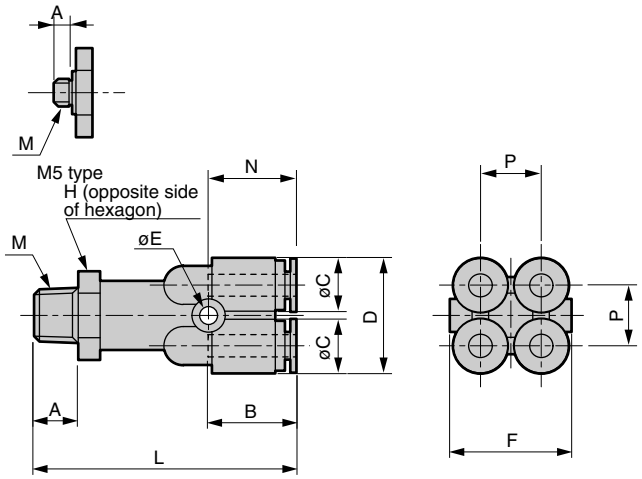


| Model no. | Applicable tube O.D. ø | M | H | L | A | B | C | D | E | F | N | P | Effective sectional area mm² |
|---|---|---|---|---|---|---|---|---|---|---|---|---|---|
| GWWY4-M5 | 4 | M5×0.8 | 14 | 42.5 | 3.4 | 16 | 10 | 21 | 3.2 | 22 | 15.5 | 11 | 4.3 |
| GWWY4- 6 | | R1/8 | 14 | 47.5 | 8 | 16 | 10 | 21 | 3.2 | 22 | 15.5 | 11 | 9.7 |
| GWWY4- 8 | | R1/4 | 14 | 50.5 | 11 | 16 | 10 | 21 | 3.2 | 22 | 15.5 | 11 | 9.7 |
| GWWY6-M5 | 6 | M5×0.8 | 17 | 46.5 | 3.4 | 17.5 | 12.5 | 26 | 3.2 | 27 | 17 | 13.5 | 4.3 |
| GWWY6- 6 | | R1/8 | 17 | 51.5 | 8 | 17.5 | 12.5 | 26 | 3.2 | 27 | 17 | 13.5 | 23 |
| GWWY6- 8 | | R1/4 | 17 | 54.5 | 11 | 17.5 | 12.5 | 26 | 3.2 | 27 | 17 | 13.5 | 23 |
| GWWY6-10 | | R3/8 | 17 | 56 | 12 | 17.5 | 12.5 | 26 | 3.2 | 27 | 17 | 13.5 | 23 |

Tetrapod shaped

● GWTR*-0

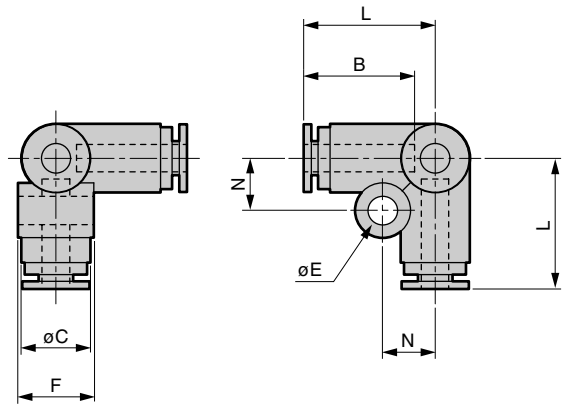


FY type

● GWFY*-0

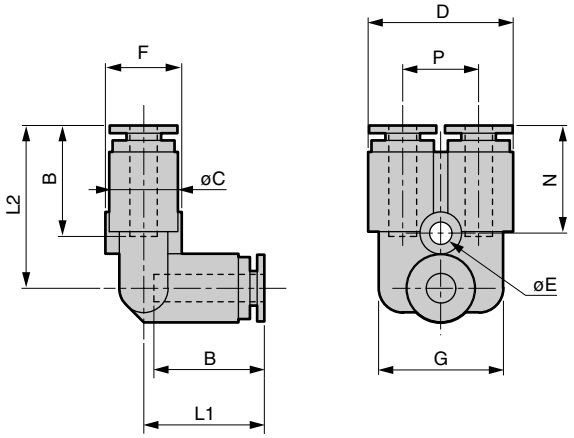


| Model no. | Applicable tube O.D. ø | L | B | C | E | F | N | Min. bore size | Effective sectional area mm² |
|---|---|---|---|---|---|---|---|---|---|
| GWTR 4-0 | 4 | 19 | 16 | 10 | 4.2 | 11 | 7.5 | 2.5 | 4 |
| GWTR 6-0 | 6 | 21.5 | 17.5 | 12.5 | 4.2 | 13.5 | 8.5 | 4 | 9.5 |
| GWTR 8-0 | 8 | 24 | 19 | 14.5 | 4.2 | 15.5 | 9.5 | 6 | 12.5 |
| GWTR10-0 | 10 | 27.5 | 21.5 | 17.5 | 4.2 | 18.5 | 13 | 8 | 29.5 |
| GWTR12-0 | 12 | 30 | 23 | 20 | 4.2 | 21 | 14 | 10 | 35.5 |

| Model no. | Applicable tube O.D. ø | L1 | L2 | B | C | D | E | F | G | N | P | Min. bore size | Effective sectional area mm² |
|---|---|---|---|---|---|---|---|---|---|---|---|---|---|
| GWFY 4-0 | 4 | 17.5 | 23.5 | 16 | 10 | 21 | 3.2 | 11 | 18 | 15.5 | 11 | 2.5 | 4 |
| GWFY 6-0 | 6 | 19.5 | 27 | 17.5 | 12.5 | 26 | 4.2 | 13.5 | 22.5 | 17 | 13.5 | 4 | 10 |
| GWFY 8-0 | 8 | 22 | 29 | 19 | 14.5 | 30 | 4.2 | 15.5 | 26.5 | 18 | 15.5 | 6 | 21 |
| GWFY10-0 | 10 | 25.5 | 33 | 21.5 | 17.5 | 36 | 4.2 | 18.5 | 31.5 | 20 | 18.5 | 8 | 29 |
| GWFY12-0 | 12 | 28 | 35.5 | 23 | 20 | 41 | 4.2 | 21 | 37 | 21.5 | 21 | 10 | 35.5 |

## Dimensions: Double Y, blanking plug, L plug, C types plug

CAD

Double Y types
● GWWY*-0

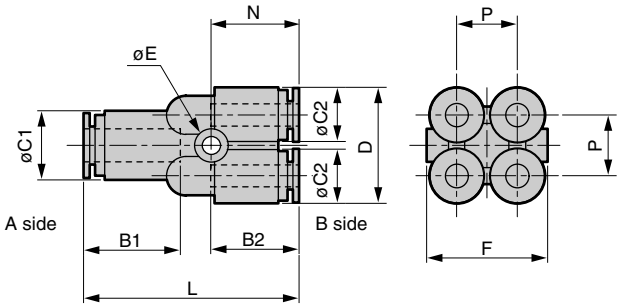


| Model no. | Applicable tube O.D. ø | | L | B1 | B2 | C1 | C2 | D | E | F | N | P | Effective sectional area mm² |
|---|---|---|---|---|---|---|---|---|---|---|---|---|---|
| | A side | B side | | | | | | | | | | | |
| GWWY64-0 | 6 | 4 | 39 | 17.5 | 16 | 12.5 | 10 | 21 | 3.2 | 22 | 15.5 | 11 | 9 |
| GWWY86-0 | 8 | 6 | 43 | 19 | 17.5 | 14.5 | 12.5 | 26 | 3.2 | 27 | 17 | 13.5 | 22 |

Blanking plug
● GWP*-B

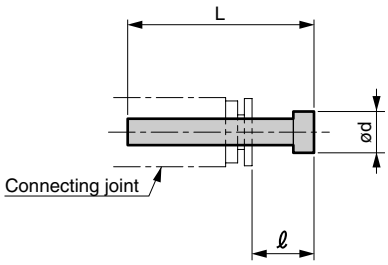


Material: Polyamide resin

| Model no. | Joint port size ø | L | ℓ* | d |
|---|---|---|---|---|
| GWJP 3-B | 3.2 | 23.5 | 11 | 5 |
| GWP 4-B | 4 | 27 | 11 | 6 |
| GWP 6-B | 6 | 29 | 11.5 | 8 |
| GWP 8-B | 8 | 33 | 14 | 10 |
| GWP10-B | 10 | 40 | 18.5 | 12 |
| GWP12-B | 12 | 43 | 20 | 14 |
| GWP16-B | 16 | 51 | 23 | 21 |

* For connecting joint, dimension of CKD (GW Series) are shown.

L type plug
● GWP*-L

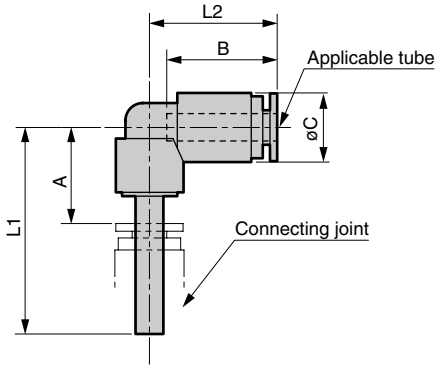


| Model no. | Applicable tube O.D. ø | Connecting joint diameter ø | L1 | L2 | A* | B | C | Min. bore size | Effective sectional area mm² |
|---|---|---|---|---|---|---|---|---|---|
| GWP 44-L | 4 | 4 | 30 | 18.5 | 14 | 16 | 10 | 1.7 | 2.1 |
| GWP 46-L | | 6 | 31 | 18.5 | 13.5 | 16 | 10 | 1.7 | 2.1 |
| GWP 48-L | | 8 | 32.5 | 18.5 | 13.5 | 16 | 10 | 1.7 | 2.1 |
| GWP 66-L | 6 | 6 | 34 | 21 | 16.5 | 17.5 | 12.5 | 3.4 | 6.7 |
| GWP 68-L | | 8 | 35.5 | 21 | 16.5 | 17.5 | 12.5 | 3.4 | 6.7 |
| GWP 610-L | | 10 | 38 | 21 | 16.5 | 17.5 | 12.5 | 3.4 | 6.7 |
| GWP 88-L | 8 | 8 | 36.5 | 23.5 | 17.5 | 19 | 14.5 | 5.4 | 16.6 |
| GWP 810-L | | 10 | 39 | 23.5 | 17.5 | 19 | 14.5 | 5.4 | 16.6 |
| GWP 812-L | | 12 | 40 | 23.5 | 17 | 19 | 14.5 | 5.4 | 16.6 |
| GWP1010-L | 10 | 10 | 41.5 | 27 | 20 | 21.5 | 17.5 | 6.8 | 24.7 |
| GWP1012-L | | 12 | 42.5 | 27 | 19.5 | 21.5 | 17.5 | 6.8 | 24.7 |
| GWP1212-L | 12 | 12 | 44.5 | 29.5 | 21.5 | 23 | 20 | 8.8 | 34 |

* For connecting joint, dimension of CKD (GW Series) are shown.

C type plug
● GWP*-C

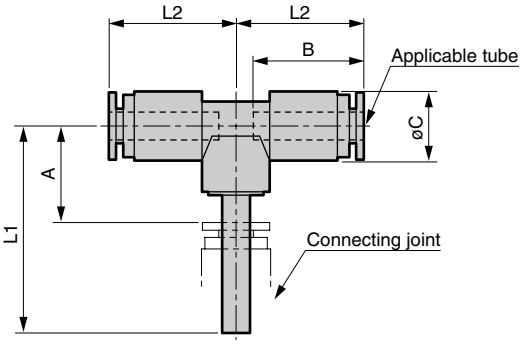


| Model no. | Applicable tube O.D. ø | Connecting joint diameter ø | L1 | L2 | A* | B | C | Min. bore size | Effective sectional area mm² |
|---|---|---|---|---|---|---|---|---|---|
| GWP 44-C | 4 | 4 | 30 | 18.5 | 14 | 16 | 10 | 1.7 | 2.4 |
| GWP 46-C | | 6 | 31 | 18.5 | 13.5 | 16 | 10 | 1.7 | 2.4 |
| GWP 48-C | | 8 | 32.5 | 18.5 | 13.5 | 16 | 10 | 1.7 | 2.4 |
| GWP 66-C | 6 | 6 | 34 | 21 | 16.5 | 17.5 | 12.5 | 3.4 | 7.3 |
| GWP 68-C | | 8 | 35.5 | 21 | 16.5 | 17.5 | 12.5 | 3.4 | 7.3 |
| GWP 610-C | | 10 | 38 | 21 | 16.5 | 17.5 | 12.5 | 3.4 | 7.3 |
| GWP 88-C | 8 | 8 | 36.5 | 23.5 | 17.5 | 19 | 14.5 | 5.4 | 19.3 |
| GWP 810-C | | 10 | 39 | 23.5 | 17.5 | 19 | 14.5 | 5.4 | 19.3 |
| GWP 812-C | | 12 | 40 | 23.5 | 17 | 19 | 14.5 | 5.4 | 19.3 |
| GWP1010-C | 10 | 10 | 41.5 | 27 | 20 | 21.5 | 17.5 | 6.8 | 28.6 |
| GWP1012-C | | 12 | 42.5 | 27 | 19.5 | 21.5 | 17.5 | 6.8 | 28.6 |
| GWP1212-C | 12 | 12 | 44.5 | 29.5 | 21.5 | 23 | 20 | 8.8 | 35.5 |

* For connecting joint, dimension of CKD (GW Series) are shown.

Refrigerating type dryer
Desiccant type dryer
High polymer membrane type dryer
Air filter
Auto. drain / others
F.R.L. (Module unit)
F.R.L. (Separate)
Compact F.R.
Precise regulator
F.R.L. (Related products)
Clean F.R.
Electro pneumatic regulator
Air booster
Speed control valve
Silencer
Check valve / others
Joint / tube
Vacuum filter
Vacuum regulator
Suction plate
Magnetic spring buffer
Mechanical pressure SW
Electronic pressure SW
Contact / close contact cont. SW
Air sensor
Pressure SW for coolant
Small flow sensor
Small flow controller
Flow sensor for air
Flow sensor for water
Total air system
Total air system (Gamma)
Ending

## Dimensions: Y type plug, cap, manifold (single with R), manifold (single)

Y type plug
● GWP*-Y

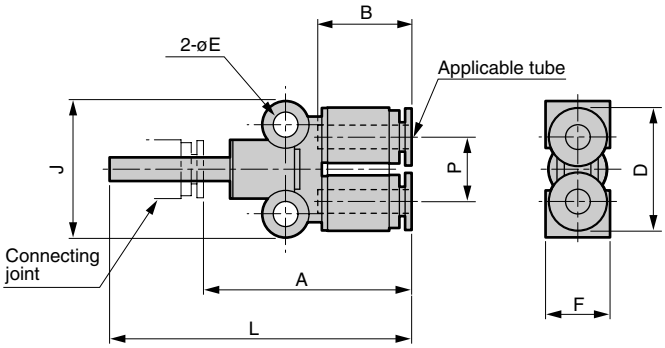


Cap
● GWC*

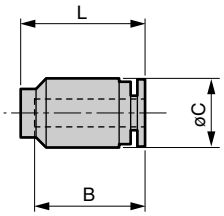


| Model no. | Applicable tube O.D. ø | Connecting joint diameter ø | L | A* | B | D | E | F | J | P | Min. bore size | Effective sectional area mm² |
|---|---|---|---|---|---|---|---|---|---|---|---|---|
| GWP 44-Y | 4 | 4 | 51.5 | 35.5 | 16 | 21 | 4.2 | 11 | 23 | 11 | 1.7 | 2.1 |
| GWP 46-Y | | 6 | 52.5 | 35 | 16 | 21 | 4.2 | 11 | 23 | 11 | 2.5 | 5.8 |
| GWP 48-Y | | 8 | 54 | 35 | 16 | 21 | 4.2 | 11 | 23 | 11 | 2.5 | 5.8 |
| GWP 66-Y | 6 | 6 | 55.5 | 38 | 17.5 | 26 | 4.2 | 13.5 | 25.5 | 13.5 | 3.9 | 9.1 |
| GWP 68-Y | | 8 | 57 | 38 | 17.5 | 26 | 4.2 | 13.5 | 25.5 | 13.5 | 4 | 15.9 |
| GWP 610-Y | | 10 | 59.5 | 38 | 17.5 | 26 | 4.2 | 13.5 | 25.5 | 13.5 | 4 | 15.9 |
| GWP 88-Y | 8 | 8 | 60 | 41 | 19 | 30 | 4.2 | 15.5 | 27 | 15.5 | 5.9 | 22.2 |
| GWP 810-Y | | 10 | 62.5 | 41 | 19 | 30 | 4.2 | 15.5 | 27 | 15.5 | 6 | 24.9 |
| GWP 812-Y | | 12 | 63.5 | 40.5 | 19 | 30 | 4.2 | 15.5 | 27 | 15.5 | 6 | 24.9 |
| GWP1010-Y | 10 | 10 | 70 | 48.5 | 21.5 | 36 | 4.2 | 18.5 | 30 | 18.5 | 6.8 | 28.2 |
| GWP1012-Y | | 12 | 71 | 48 | 21.5 | 36 | 4.2 | 18.5 | 30 | 18.5 | 8 | 35.5 |
| GWP1212-Y | 12 | 12 | 76 | 53 | 23 | 41 | 4.2 | 21 | 32 | 21 | 8.8 | 36.3 |

* For connecting joint, dimension of CKD (GW Series) are shown.

| Model no. | Applicable tube O.D. ø | B | øC | L |
|---|---|---|---|---|
| GWC 4 | 4 | 16 | 10 | 18 |
| GWC 6 | 6 | 17.5 | 12.5 | 19.5 |
| GWC 8 | 8 | 19 | 14.5 | 21 |
| GWC10 | 10 | 21.5 | 17.5 | 24 |
| GWC12 | 12 | 23 | 20 | 26 |

Manifold (single with R)
● GWMF*-*

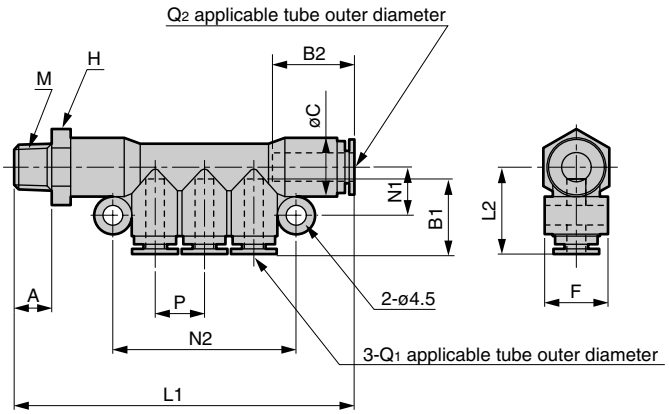


Manifold (single solenoid)
● GWMF*-0

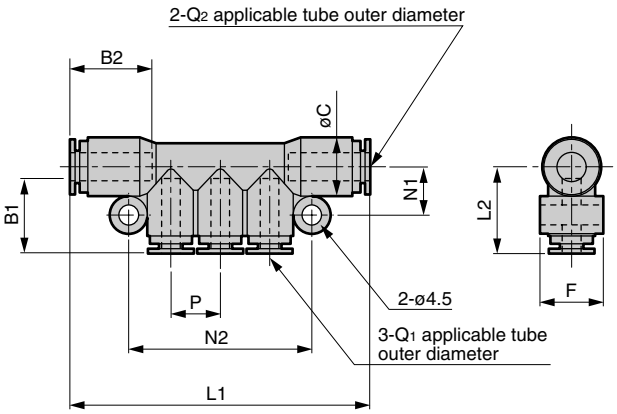


| Model no. | Applicable tube O.D.ø | | M | H | L1 | L2 | A | B1 | B2 | C | F | N1 | N2 | P | Effective sectional area mm² |
|---|---|---|---|---|---|---|---|---|---|---|---|---|---|---|---|
| | Q1 | Q2 | | | | | | | | | | | | | |
| GWMF 46- 6 | 4 | 6 | R1/8 | 14 | 72.5 | 18.5 | 8 | 16 | 17.5 | 12.5 | 13.5 | 10.5 | 39 | 10.5 | 8.3 |
| GWMF 48- 8 | 4 | 8 | R1/4 | 17 | 77.5 | 19.5 | 11 | 16 | 19 | 14.5 | 15.5 | 11.5 | 39 | 10.5 | 24.2 |
| GWMF 68- 8 | 6 | 8 | R1/4 | 17 | 84.5 | 21 | 11 | 17.5 | 19 | 14.5 | 15.5 | 11.5 | 46.5 | 13 | 24.2 |
| GWMF610-10 | 6 | 10 | R3/8 | 19 | 91.5 | 22 | 12 | 17.5 | 21.5 | 17.5 | 18.5 | 13 | 46.5 | 13 | 35.5 |
| GWMF810-10 | 8 | 10 | R3/8 | 19 | 97.5 | 23.5 | 12 | 19 | 21.5 | 17.5 | 18.5 | 13 | 52.5 | 15 | 35.5 |

| Model no. | Applicable tube O.D.ø | | L1 | L2 | B1 | B2 | C | F | N1 | N2 | P | Effective sectional area mm² |
|---|---|---|---|---|---|---|---|---|---|---|---|---|
| | Q1 | Q2 | | | | | | | | | | |
| GWMF 46-0 | 4 | 6 | 64 | 18.5 | 16 | 18.5 | 12.5 | 13.5 | 10.5 | 39 | 10.5 | 7.9 |
| GWMF 48-0 | 4 | 8 | 66 | 19.5 | 16 | 19.5 | 14.5 | 15.5 | 11.5 | 39 | 10.5 | 22 |
| GWMF 68-0 | 6 | 8 | 73 | 21 | 17.5 | 21 | 14.5 | 15.5 | 11.5 | 46.5 | 13 | 22 |
| GWMF610-0 | 6 | 10 | 78.5 | 22 | 17.5 | 22 | 17.5 | 18.5 | 13 | 46.5 | 13 | 30 |
| GWMF810-0 | 8 | 10 | 84.5 | 23.5 | 19 | 23.5 | 17.5 | 18.5 | 13 | 52.5 | 15 | 30 |

## Dimensions: Manifold (double with R), manifold (double), insert ring

Manifold (double with R)
● GWMF*-*-W

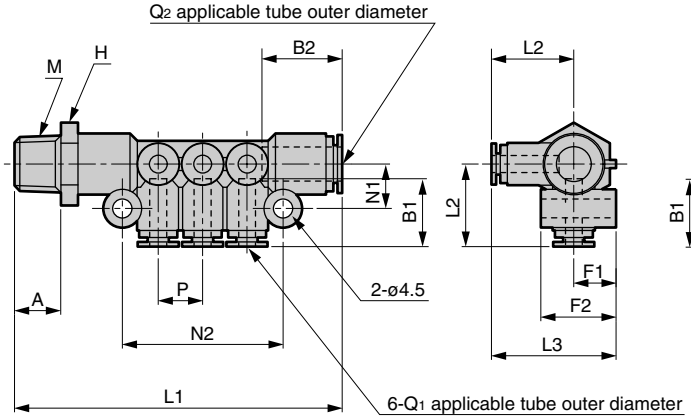


Manifold (double solenoid)
● GWMF*-0-W

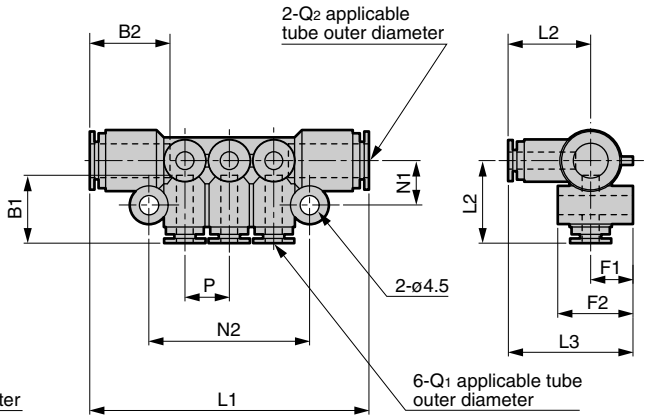


| Model no. | Applicable tube O.D.ø | | M | H | L1 | L2 | L3 | A | B1 | B2 | F1 | F2 | N1 | N2 | P | Effective sectional area mm² |
|---|---|---|---|---|---|---|---|---|---|---|---|---|---|---|---|---|
| | Q1 | Q2 | | | | | | | | | | | | | | |
| GWMF 48- 8-W | 4 | 8 | R1/4 | 17 | 77.5 | 19.5 | 29.5 | 11 | 16 | 19 | 10 | 17.5 | 10.5 | 38 | 10.5 | 24.3 |
| GWMF 48-10-W | 4 | 8 | R3/8 | 17 | 79 | 19.5 | 29.5 | 12 | 16 | 19 | 10 | 17.5 | 10.5 | 38 | 10.5 | 23.5 |
| GWMF610-10-W | 6 | 10 | R3/8 | 19 | 91.5 | 22 | 32 | 12 | 17.5 | 21.5 | 10 | 19.5 | 12 | 45 | 13 | 35.8 |
| GWMF610-15-W | 6 | 10 | R1/2 | 19 | 94.5 | 22 | 32 | 15 | 17.5 | 21.5 | 10 | 19.5 | 12 | 45 | 13 | 35.8 |
| GWMF812-10-W | 8 | 12 | R3/8 | 22 | 100 | 24.5 | 36 | 12 | 19 | 23 | 11.5 | 22 | 13 | 51 | 15 | 38.2 |
| GWMF812-15-W | 8 | 12 | R1/2 | 22 | 103 | 24.5 | 36 | 15 | 19 | 23 | 11.5 | 22 | 13 | 51 | 15 | 38.2 |

| Model no. | Applicable tube O.D.ø | | L1 | L2 | L3 | B1 | B2 | F1 | F2 | N1 | N2 | P | Effective sectional area mm² |
|---|---|---|---|---|---|---|---|---|---|---|---|---|---|
| | Q1 | Q2 | | | | | | | | | | | |
| GWMF4 8-0-W | 4 | 8 | 66 | 19.5 | 29.5 | 16 | 19 | 10 | 17.5 | 10.5 | 38 | 10.5 | 22 |
| GWMF610-0-W | 6 | 10 | 78.5 | 22 | 32 | 17.5 | 21.5 | 10 | 19.5 | 12 | 45 | 13 | 30.4 |
| GWMF812-0-W | 8 | 12 | 87 | 24.5 | 36 | 19 | 23 | 11.5 | 22 | 13 | 51 | 15 | 36 |

Insert ring (tube U-92* / U-95*) (custom order)
● INS-U*-1

Material: Brass + electroless nickeling

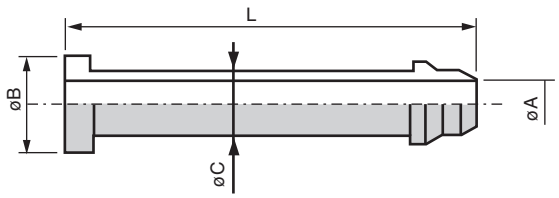


● Tube U-92* / U-95*

| Model no. | øA | øB | øC | L |
|---|---|---|---|---|
| INS-U32-1 | 1.1 | 2.2 | 1.7 | 12.7 |
| INS-U04-1 | 1.1 | 3 | 1.8 | 17 |
| INS-U06-1 | 3 | 5 | 3.8 | 18 |
| INS-U08-1 | 4 | 7 | 4.8 | 21 |
| INS-U10-1 | 5.5 | 9 | 6.3 | 23.5 |
| INS-U12-1 | 7 | 11 | 7.8 | 25 |

* Tube for NU is available as custom-order.
* Use insert ring if tube U-92*, U-95* or NU is used for a vacuum circuit.

# GWJ

## Joint (mini-type)

### Port size M3 to 1/8 (Rc or R)

RoHS CAD

● Small push-in joint with wide variation

Space saving type with smaller body. Dead space of pipe can be decreased dramatically.

## ■ Straight type

| Single straight GWJS*-* | Female, straight GWJS3-*-M | Bulk head GWJS3-0-X | Straight GWJS3-0 |
|---|---|---|---|
| Applicable tube O.D.ø: 3.2, 4, 6 | Applicable tube O.D.ø: 3.2 | Applicable tube O.D.ø: 3.2 | Applicable tube O.D.ø: 3.2 |
| | | | |
| • Page : 946 | • Page : 946 | • Page : 946 | • Page : 946 |

## ■ Elbow type

| Different diameter straight GWJS*-0 | Single elbow GWJL*-* | Long elbow GWJL*-*-L | Elbow GWJL3-0 |
|---|---|---|---|
| Applicable tube O.D.ø: 3.2 / 4, 3.2 / 6 | Applicable tube O.D.ø: 3.2, 4, 6 | Applicable tube O.D.ø: 3.2, 4, 6 | Applicable tube O.D.ø: 3.2 |
| | | 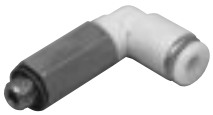 | |
| • Page : 946 | • Page : 946 | • Page : 947 | • Page : 947 |

## ■ Union Tee type

| Both push-in branch GWJT3-* | D type union Tee GWJT3-*-D | Union Tee GWJT3-0 | Y type union Tee GWJY*-0 |
|---|---|---|---|
| Applicable tube O.D.ø: 3.2 | Applicable tube O.D.ø: 3.2 | Applicable tube O.D.ø: 3.2 | Applicable tube O.D.ø: 3.2 / 3.2, 3.2 / 4 |
| | | | |
| • Page : 947 | • Page : 947 | • Page : 947 | • Page : 947 |

## ■ Plug

| Blanking plug GWJP3-B |
|---|
| Applicable tube O.D.ø: 3.2 |
| |
| • Page : 948 |

●Sales unit is 10 pieces/1 box.

## Specifications

| Descriptions | GWJ |
|---|---|
| Working fluid | Compressed air |
| Max. working pressure MPa | 1.0 |
| Working temperature ˚C | -10 to 60 (no freezing) |
| Applicable tube | Soft nylon tube (Model no. F-1532, F-1504, F-1506)<br>Urethane tube (Model no. U-9532, U-9504, U-9506, NU-04, NU-06) Note |

Note: Refer to page 1008 for tube dimensions, ambient temperature and working pressure.

## How to order

* Refer to model no. selections in dimensions (pages 946 to 948) for combination of model no.

GWJ S 3 - 6 - M
(A) (B) (C) (D)

| (A) Shape | |
|---|---|
| S | Straight |
| L | Elbow |
| Y | Y type union Tee |
| T | Union Tee |
| P | Plug |

Note:Sales unit is 10 pieces/1 box.

| (B) Applicable tube O.D. | |
|---|---|
| 3 | ø3.2 |
| 4 | ø4 |
| 6 | ø6 |

| (C) Port size | |
|---|---|
| M3 | M3×0.5 |
| M5 | M5×0.8 |
| 6 | R1/8 |
| 0 | No thread |
| 4P | Plug for ø4 |
| 6P | Plug for ø6 |
| B | Blanking plug |

| (D) Other combinations | |
|---|---|
| L | Long |
| D | D type |
| X | Bulk head |
| M | Female type |

## Clean room specifications (catalog No. CB-033SA)

GWJ –·····– P7*

GWJ –·····– P80

## Internal structure and main parts list

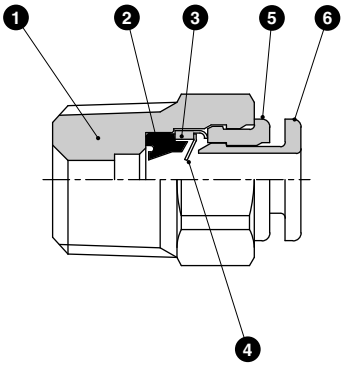


| No. | Name | Material |
|---|---|---|
| 1 | Body *1 | Brass (electroless nickeling treatment) |
| | | PBT |
| 2 | Packing seal | Nitrile rubber |
| 3 | Holder | Brass (electroless nickeling treatment) |
| 4 | Chuck | Stainless steel |
| 5 | Outer ring | Metal type ¦ polyacetal |
| | | Resin type ¦ brass (electroless nickeling treatment) |
| 6 | Push ring | Polyacetal |

*1: The body of the single-ended straight, female straight, and bulkhead is brass (electroless nickel plated).

Refrigerating type dryer
Desiccant type dryer
High polymer membrane type dryer
Air filter
Auto. drain / others
F.R.L. (Module unit)
F.R.L. (Separate)
Compact F.R.
Precise regulator
F.R.L. (Related products)
Clean F.R.
Electro pneumatic regulator
Air booster
Speed control valve
Silencer
Check valve / others
Joint / tube
Vacuum filter
Vacuum regulator
Suction plate
Magnetic spring buffer
Mechanical pressure SW
Electronic pressure SW
Contact / close contact cont. SW
Air sensor
Pressure SW for coolant
Small flow sensor
Small flow controller
Flow sensor for air
Flow sensor for water
Total air system
Total air system (Gamma)
Ending

## Dimensions: Single straight, female straight, bulk head, straight, different diameter straight, single elbow

### Single straight

● GWJS*-*

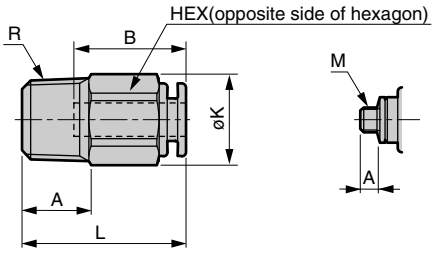


* dimension is for model with punched hexagon hole.

| Model no. | Applicable tube O.D. ø | R M | HEX | K | L | A | B | Min. bore size | Effective sectional area mm² |
|---|---|---|---|---|---|---|---|---|---|
| GWJS3-M3 | 3.2 | M3×0.5 | 8 | 8.8 | 17 | 2.4 | 12.5 | 1.2 | 0.9 |
| GWJS3-M5 | | M5×0.8 | 8 | 8.8 | 18 | 3.4 | 12.5 | 2.5 | 2.5 |
| GWJS3- 6 | | 1/8 | 10 | 11 | 16.5 | 8 | 12.5 | 2.5 * | 2.5 |
| GWJS4-M3 | 4 | M3×0.5 | 10 | 11 | 18 | 2.4 | 13.5 | 1.2 | 0.9 |
| GWJS4-M5 | | M5×0.8 | 10 | 11 | 19 | 3.4 | 13.5 | 2.5 | 4 |
| GWJS4- 6 | | 1/8 | 10 | 11 | 20 | 8 | 13.5 | 2.5 * | 4 |
| GWJS6-M5 | 6 | M5×0.8 | 11 | 12.1 | 20 | 3.4 | 14.5 | 2.5 | 4 |
| GWJS6- 6 | | 1/8 | 11 | 12.1 | 21.5 | 8 | 14.5 | 4 * | 11 |

### Female, straight

● GWJS3-*-M

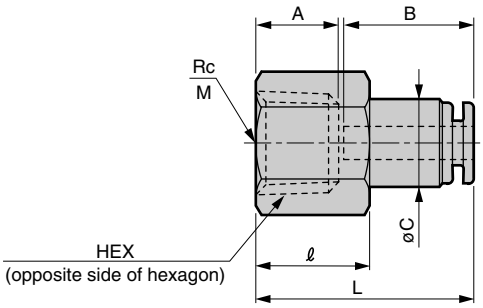


| Model no. | Applicable tube O.D. ø | Rc M | HEX | L | A | B | C | ℓ | Min. bore size | Effective sectional area mm² |
|---|---|---|---|---|---|---|---|---|---|---|
| GWJS3-M3-M | 3.2 | M3×0.5 | 8 | 17.5 | 4 | 12.5 | 7.8 | 7.0 | 2.5 | 2.5 |
| GWJS3-M5-M | | M5×0.8 | 8 | 18.5 | 5 | 12.5 | 7.8 | 8.0 | 2.5 | 2.5 |
| GWJS3-6-M | | 1/8 | 12 | 21.5 | 8 | 12.5 | 8.5 | 11.0 | 2.5 | 2.5 |

### Bulk head

● GWJS3-0-X

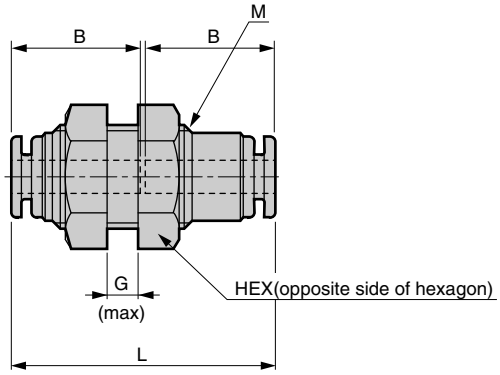


| Model no. | Applicable tube O.D. ø | L | B | HEX | Min. bore size | M | Panel thickness / G | Panel Hole diameter | Effective sectional area mm² |
|---|---|---|---|---|---|---|---|---|---|
| GWJS3-0-X | 3.2 | 26.5 | 12.5 | 12 | 2.5 | M10×1.0 | 5 | 10.5 | 2.5 |

### Straight

● GWJS3-0

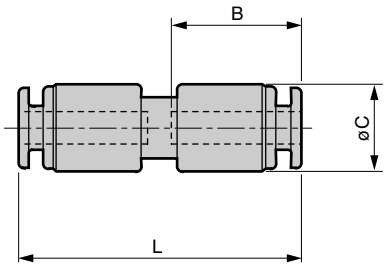


| Model no. | Applicable tube O.D. ø | L | B | C | Min. bore size | Effective sectional area mm² |
|---|---|---|---|---|---|---|
| GWJS3-0 | 3.2 | 27.5 | 12.5 | 8.5 | 2.2 | 2.5 |

### Different diameter straight

● GWJS*-0

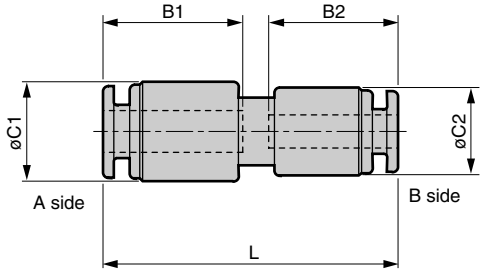


| Model no. | Applicable tube O.D.ø | | L | B1 | B2 | C1 | C2 | Panel Hole diameter | Effective sectional area mm² |
|---|---|---|---|---|---|---|---|---|---|
| | A side | B side | | | | | | | |
| GWJS34-0 | 4 | 3.2 | 28.5 | 13.5 | 12.5 | 9.6 | 8.5 | 2.2 | 2.5 |
| GWJS36-0 | 6 | 3.2 | 28.5 | 14.5 | 12.5 | 11.8 | 8.8 | 2.2 | 2.5 |

### Single elbow

● GWJL*-*

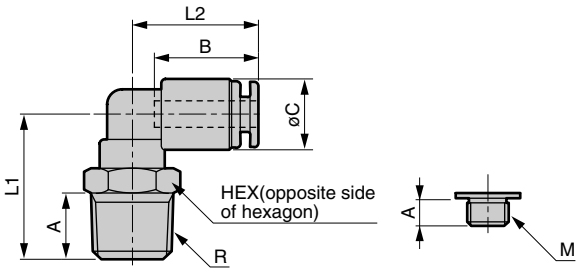


| Model no. | Applicable tube O.D. ø | R M | HEX | L1 | L2 | A | B | C | Min. bore size | Effective sectional area mm² |
|---|---|---|---|---|---|---|---|---|---|---|
| GWJL3-M3 | 3.2 | M3×0.5 | 8 | 13 | 15.5 | 2.4 | 12.5 | 8.5 | 1.2 | 0.8 |
| GWJL3-M5 | | M5×0.8 | 8 | 13 | 15.5 | 3.4 | 12.5 | 8.5 | 2.2 | 2.5 |
| GWJL3- 6 | | 1/8 | 10 | 17.5 | 15.5 | 8 | 12.5 | 8.5 | 2.2 | 2.3 |
| GWJL4-M3 | 4 | M3×0.5 | 8 | 13 | 16.5 | 2.4 | 13.5 | 9.6 | 1.2 | 0.8 |
| GWJL4-M5 | | M5×0.8 | 8 | 13 | 16.5 | 3.4 | 13.5 | 9.6 | 2.5 | 3 |
| GWJL4- 6 | | 1/8 | 10 | 17.5 | 16.5 | 8 | 13.5 | 9.6 | 2.5 | 3 |
| GWJL6-M5 | 6 | M5×0.8 | 10 | 15.5 | 18.5 | 3.4 | 14.5 | 11.8 | 2.5 | 3.5 |
| GWJL6- 6 | | 1/8 | 10 | 18.5 | 18.5 | 8 | 14.5 | 11.8 | 4 | 9.5 |

## Dimensions: Long elbow, elbow, both push-in branch, D type union Tee, Union Tee, Y type union Tee

Long elbow

● GWJL*-*-L

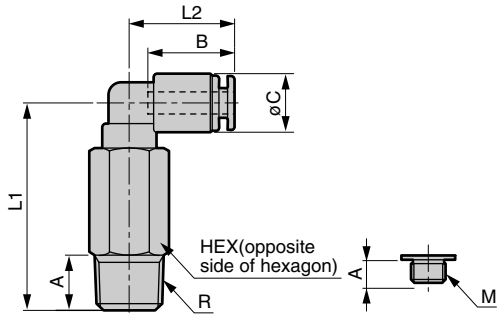


| Model no. | Applicable tube O.D. ø | R M | HEX | L1 | L2 | A | B | C | Min. bore size | Effective sectional area mm² |
|---|---|---|---|---|---|---|---|---|---|---|
| GWJL3-M3-L | 3.2 | M3×0.5 | 8 | 25.5 | 15.5 | 2.4 | 12.5 | 8.5 | 1.2 | 0.8 |
| GWJL3-M5-L | | M5×0.8 | 8 | 25.5 | 15.5 | 3.4 | 12.5 | 8.5 | 2.2 | 2.3 |
| GWJL3- 6-L | | 1/8 | 10 | 30 | 15.5 | 8 | 12.5 | 8.5 | 2.2 | 2.3 |
| GWJL4-M5-L | 4 | M5×0.8 | 8 | 25.5 | 16.5 | 3.4 | 13.5 | 9.6 | 2.5 | 3 |
| GWJL4- 6-L | | 1/8 | 10 | 30 | 16.5 | 8 | 13.5 | 9.6 | 2.5 | 3 |
| GWJL6-M5-L | 6 | M5×0.8 | 10 | 30.5 | 18.5 | 3.4 | 14.5 | 11.8 | 2.5 | 3.5 |
| GWJL6- 6-L | | 1/8 | 10 | 33.5 | 18.5 | 8 | 14.5 | 11.8 | 4 | 8.5 |

Elbow

● GWJL3-0

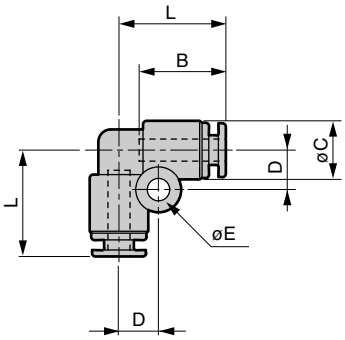


| Model no. | Applicable tube O.D. ø | L | B | C | D | E | Min. bore size | Effective sectional area mm² |
|---|---|---|---|---|---|---|---|---|
| GWJL3-0 | 3.2 | 15.5 | 12.5 | 8.5 | 5.7 | 3.2 | 2.2 | 2.3 |

Both push-in branch

● GWJT3-*

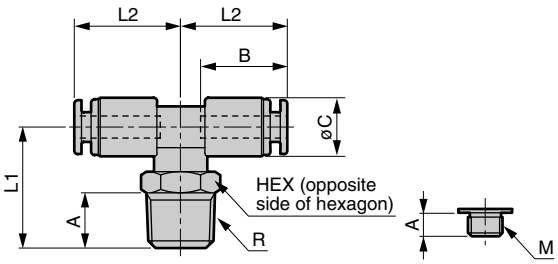


| Model no. | Applicable tube O.D. ø | R M | HEX | L1 | L2 | A | B | C | Min. bore size | Effective sectional area mm² |
|---|---|---|---|---|---|---|---|---|---|---|
| GWJT3-M3 | 3.2 | M3×0.5 | 8 | 13 | 15.5 | 2.4 | 12.5 | 8.5 | 1.2 | 0.9 |
| GWJT3-M5 | | M5×0.8 | 8 | 13 | 15.5 | 3.4 | 12.5 | 8.5 | 2.2 | 2.7 |
| GWJT3-6 | | 1/8 | 10 | 17.5 | 15.5 | 8 | 12.5 | 8.5 | 2.2 | 2.7 |

D type union Tee

● GWJT3-*-D

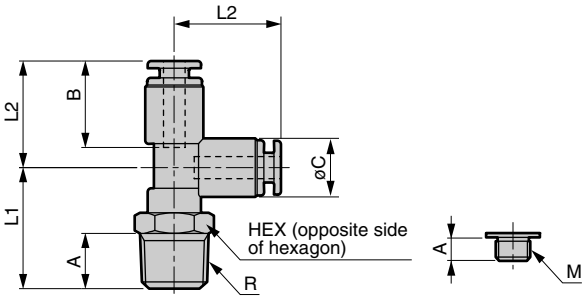


| Model no. | Applicable tube O.D. ø | R M | HEX | L1 | L2 | A | B | C | Min. bore size | Effective sectional area mm² |
|---|---|---|---|---|---|---|---|---|---|---|
| GWJT3-M3-D | 3.2 | M3×0.5 | 8 | 13 | 15.5 | 2.4 | 12.5 | 8.5 | 1.2 | 0.9 |
| GWJT3-M5-D | | M5×0.8 | 8 | 13 | 15.5 | 3.4 | 12.5 | 8.5 | 2.2 | 2.7 |
| GWJT3-6-D | | 1/8 | 10 | 17.5 | 15.5 | 8 | 12.5 | 8.5 | 2.2 | 2.7 |

Union Tee

● GWJT3-0

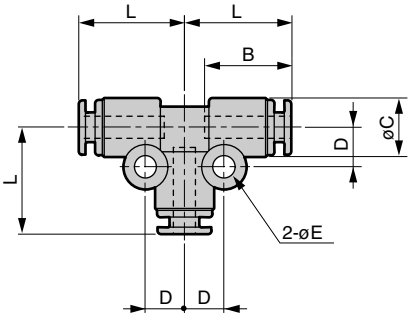


| Model no. | Applicable tube O.D. ø | L | B | C | D | E | Min. bore size | Effective sectional area mm² |
|---|---|---|---|---|---|---|---|---|
| GWJT3-0 | 3.2 | 15.5 | 12.5 | 8.5 | 5.7 | 3.2 | 2.2 | 2.7 |

Y type union Tee

● GWJY*-0

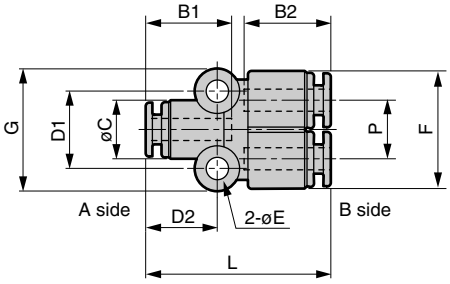


| Model no. | Applicable tube O.D. ø | | L | B1 | B2 | C | D1 | D2 | E | F | P | G | Effective sectional area mm² |
|---|---|---|---|---|---|---|---|---|---|---|---|---|---|
| | A side | B side | | | | | | | | | | | |
| GWJY33-0 | 3.2 | 3.2 | 27 | 12.5 | 12.5 | 8.5 | 11.2 | 10.5 | 3.2 | 17 | 8.5 | 17.7 | 2.7 |
| GWJY43-0 | 4 | 3.2 | 28.5 | 13.5 | 12.5 | 9.6 | 12.2 | 12 | 3.2 | 17 | 8.5 | 18.7 | 2.7 |

Refrigerating type dryer
Desiccant type dryer
High polymer membrane type dryer
Air filter
Auto. drain / others
F.R.L. (Module unit)
F.R.L. (Separate)
Compact F.R.
Precise regulator
F.R.L. (Related products)
Clean F.R.
Electro pneumatic regulator
Air booster
Speed control valve
Silencer
Check valve / others
Joint / tube
Vacuum filter
Vacuum regulator
Suction plate
Magnetic spring buffer
Mechanical pressure SW
Electronic pressure SW
Contact / close contact cont. SW
Air sensor
Pressure SW for coolant
Small flow sensor
Small flow controller
Flow sensor for air
Flow sensor for water
Total air system
Total air system (Gamma)
Ending

## Dimensions: Blanking plug

Blanking plug

- GWJP3-B
- GWP*-B

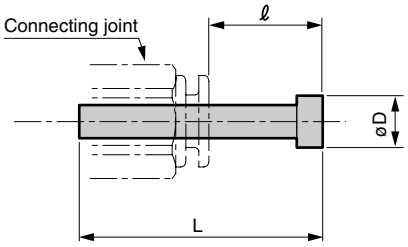


Material: Polyamide

| Model no. | Connecting joint diameter ø | L | ℓ* | D |
|---|---|---|---|---|
| GWJP3-B | 3.2 | 23.5 | 11 | 5 |
| GWP 4-B | 4 | 27 | 11 | 6 |
| GWP 6-B | 6 | 29 | 11.5 | 8 |

* Dimension of CKD connecting joints (GW and GWJ series) are shown.