MJ.JL

Female joint / joint

Port size 1/8 to 1/2 (Rc or R)

CAD

● Stable and secure piping due to double chuck. This is an excellent tightening joint with high reliability.

AOI Co, Ltd.

Female joint MJ Series

■ Straight type

Single straight MJS*-*	Straight MJS*-0	Female, straight MJS*-*-M	Bulk head MJS*-0-X	Bulk head female MJS*-*-E
			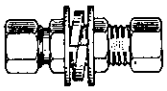	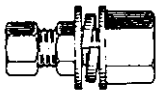
Applicable tube O.D.ø	Applicable tube O.D.ø	Applicable tube O.D.ø	Applicable tube O.D.ø	Applicable tube O.D.ø
4	4	4	4	4
6	6	6	6	6
8	8	8	8	8
10	10	10	10	10
12	12	12	12	12
15	15	15	15	15
• Page : 971	• Page : 971	• Page : 971	• Page : 971	• Page : 972

■ Elbow type

Single elbow MJL*-*	Elbow MJL*-0	Female, elbow MJL*-*-M	Turn elbow MJL*-*-T
	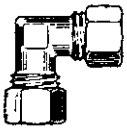	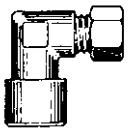	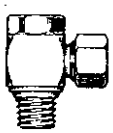
Applicable tube O.D.ø	Applicable tube O.D.ø	Applicable tube O.D.ø	Applicable tube O.D.ø
4	4	4	4
6	6	6	6
8	8	8	8
10	10	10	10
12	12	12	12
15	15		15
• Page : 972	• Page : 972	• Page : 972	• Page : 973

■ Tee union type

Both push-in branch MJT*-*
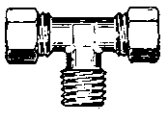
Applicable tube O.D.ø
4
6
8
10
12
15
• Page : 973

D type union Tee MJT*-*-D	Union Tee MJT*-0	Female, union Tee MJT*-*-M	Sleeve MJN*-0	Insert ring MJU*-0
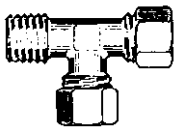	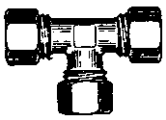	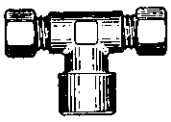		
Applicable tube O.D.ø	Applicable tube O.D.ø	Applicable tube O.D.ø	Applicable tube O.D.ø	Applicable tube O.D.ø
4	4	4	4	4
6	6	6	6	6
8	8	8	8	8
10	10	10	10	10
12	12	12	12	12
15	15	12	15	12
• Page : 973	• Page : 973	• Page : 974	• Page : 974	• Page : 974

Joint

Elbow/JL
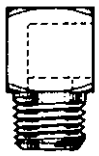
Port size R,Rc
1/8
1/4
3/8
1/2
• Page : 975

●Sales unit is 10 pieces/1 bag.

Refrigerating type dryer
Desiccant type dryer
High polymer membrane type dryer
Air filter
Auto. drain / others
F.R.L. (Module unit)
F.R.L. (Separate)
Compact F.R.
Precise regulator
F.R.L. (Related products)
Clean F.R.
Electro pneumatic regulator
Air booster
Speed control valve
Silencer
Check valve / others
Joint / tube
Vacuum filter
Vacuum regulator
Suction plate
Magnetic spring buffer
Mechanical pressure SW
Electronic pressure SW
Contact / close contact cont. SW
Air sensor
Pressure SW for coolant
Small flow sensor
Small flow controller
Flow sensor for air
Flow sensor for water
Total air system
Total air system (Gamma)
Ending

Specifications

Descriptions	MJ
Working fluid	Compressed air
Max. working pressure MPa	1.0
Working temperature °C	-10 to 60 (no freezing)
Applicable tube	Soft nylon tube (F-15**), Urethane tube (U-95**) Note Coiling tube (KX-12**)

Note: Refer to page 1008 for tube dimensions, ambient temperature and working pressure.

How to order

MJ S 4 – 6 – M

* Refer to model no. sections on dimensions page (pages 971 to 974) for combination of model no.

Ⓐ Shape

Ⓐ Shape	
S	Straight
L	Elbow
T	Union Tee
N	Sleep
U	Insert ring

Ⓑ Applicable tube O.D.

Ⓑ Applicable tube O.D.	
4	ø4
6	ø6
8	ø8
10	ø10
12	ø12
15	ø15

Ⓒ Port size

Ⓒ Port size	
6	R1/8
8	R1/4
10	R3/8
15	R1/2
0	Without screw

Ⓓ Other combinations

Ⓓ Other combinations	
D	D type
E	Bulk head female
M	Female
T	Turn
X	Bulk head

Note: Sales unit is 10 pieces /1 bag.

Internal structure and parts list

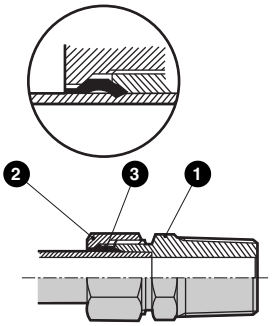

No.	Parts name	Material
1	Body	Brass
2	Nut	Brass
3	Sleep	Brass

Safety Precautions

- If urethane or soft nylon tube is used in high working temperature, use insert ring (Refer to page 974). If an insert ring is not used, tube may come off from a joint.
- For copper tube, use a tube with class 1/2H (heat treatment) or less and tube wall thickness 1mm or less.
- If a tube is used where a tube mo ves frequently, troubles may occur. So, avoid use in such place.

Mounting and removal

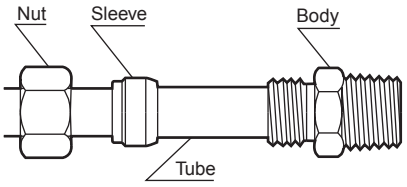

(1) Couple the nut and sleeve plastic tube or cupper tube as shown in the figure, insert the tube until hitting the joint (tube end), then tighten the nut by hand.

(2) Tighten the nut by spanner, etc. Applicable tightening turn is 1 3/4 for plastic tube, while 1 1/4 to 1 1/2 for copper tube (1/2H and wall thickness 1mm).

(3) Cut tube as right angle as possible, please eliminate burr and foreign matter, etc.

(4) For temporally tightening, turn should be 1/4 turn less than applicable tightening turn, while to tighten securely, tighten 1/4 turn more. For retightening, also 1/4 turn more.

Dimensions: Single straight, straight, female straight, bulk head

● Single straight MJS*-*

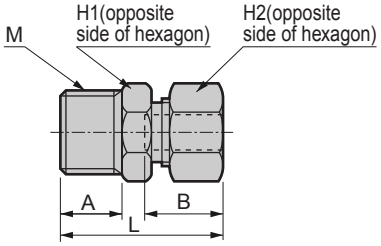

* L and B dimensions show rough dimensions before fixing nut.

Model no.	Applicable tube O.D.ø	M	H1	H2	L	A	B	Min. bore size	Effective sectional area (mm²)
MJS4-6	4	R1/8	10	10	22.5	8	11	3	4.1
MJS4-8	4	R1/4	14	10	26	11	11	3	3.9
MJS6-6	6	R1/8	10	12	23.5	8	11.5	4.5	7.9
MJS6-8	6	R1/4	14	12	27	11	11.5	4.5	7.8
MJS6-10	6	R3/8	17	12	28.5	12	11.5	4.5	7.9
MJS8-6	8	R1/8	12	14	25.5	8	13	6	19.5
MJS8-8	8	R1/4	14	14	28.5	11	13	6	20.1
MJS8-10	8	R3/8	17	14	30	12	13	6	19.5
MJS10-8	10	R1/4	14	17	30.5	11	14.5	8	36.1
MJS10-10	10	R3/8	17	17	31.5	12	14.5	8	36.1
MJS10-15	10	R1/2	22	17	34.5	15	14.5	8	36.1
MJS12-8	12	R1/4	16	19	32	11	16	9	57.8
MJS12-10	12	R3/8	17	19	33	12	16	10	55.5
MJS12-15	12	R1/2	22	19	36	15	16	10	57.8
MJS15-10	15	R3/8	20	23	37	12	19	12	113.3
MJS15-15	15	R1/2	23	23	40	15	19	12	115.2

● Straight MJS*-0

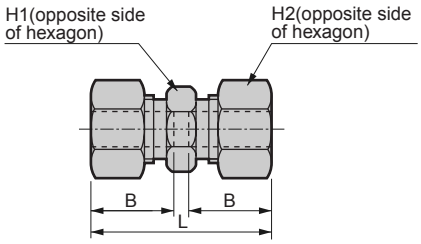

* L and B dimensions show rough dimensions before fixing nut.

Model no.	Applicable tube O.D.ø	H1	H2	L	B	Min. bore size	Effective sectional area (mm²)
MJS4-0	4	8	10	25.5	11	3	4.3
MJS6-0	6	10	12	27.5	11.5	4.5	8.1
MJS8-0	8	12	14	31	13	6	25.2
MJS10-0	10	14	17	34	14.5	8	43.2
MJS12-0	12	16	19	37	16	10	68.6
MJS15-0	15	20	23	44	19	12	106.0

● Female, straight MJS*-*-M

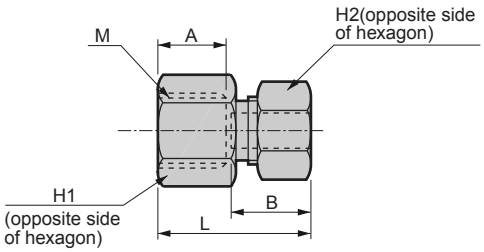

* L and B dimensions show rough dimensions before fixing nut.

Model no.	Applicable tube O.D.ø	M	H1	H2	L	A	B	Min. bore size	Effective sectional area (mm²)
MJS4-6-M	4	Rc1/8	13	10	20	8	11	3	4.0
MJS4-8-M	4	Rc1/4	17	10	23	11	11	3	4.8
MJS6-6-M	6	Rc1/8	13	12	21	8	11.5	4.5	8.1
MJS6-8-M	6	Rc1/4	17	12	24	11	11.5	4.5	8.6
MJS6-10-M	6	Rc3/8	20	12	25	12	11.5	4.5	14.4
MJS8-6-M	8	Rc1/8	13	14	22.5	8	13	6	15.1
MJS8-8-M	8	Rc1/4	17	14	25.5	11	13	6	20.1
MJS8-10-M	8	Rc3/8	20	14	26.5	12	13	6	25.1
MJS10-8-M	10	Rc1/4	17	17	27	11	14.5	8	36.1
MJS10-10-M	10	Rc3/8	20	17	28	12	14.5	8	34.4
MJS10-15-M	10	Rc1/2	26	17	31	15	14.5	8	34.4
MJS12-8-M	12	Rc1/4	17	19	28.5	11	16	10	55.2
MJS12-10-M	12	Rc3/8	20	19	29.5	12	16	10	55.5
MJS12-15-M	12	Rc1/2	26	19	33	15	16	10	55.5
MJS15-10-M	15	Rc3/8	20	23	33	12	19	12	73.7
MJS15-15-M	15	Rc1/2	26	23	36	15	19	12	103.3

● Bulk head MJS*-0 X

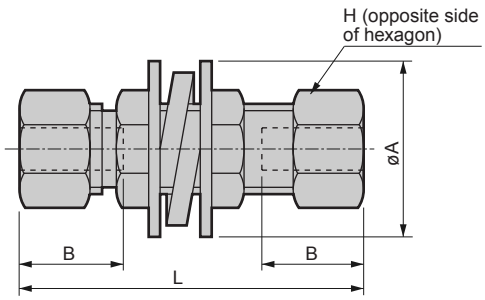

* L and B dimensions show rough dimensions before fixing nut. Mounting plate thickness 4mm or less

Model no.	Applicable tube O.D.ø	H	L	B	Installation hole diameter	Min. bore size	Effective sectional area (mm²)	A
MJS4-0-X	4	10	39	11	9	3	3.9	18
MJS6-0-X	6	12	43	11.5	11	4.5	7.7	22
MJS8-0-X	8	14	47	13	13	6	25.9	24
MJS10-0-X	10	17	51	14.5	15	8	41.1	28
MJS12-0-X	12	19	54	16	17	10	67.6	32
MJS15-0-X	15	23	63	19	21	12	97.0	40

Refrigerating type dryer
Desiccant type dryer
High polymer membrane type dryer
Air filter
Auto. drain / others
F.R.L. (Module unit)
F.R.L. (Separate)
Compact F.R.
Precise regulator
F.R.L. (Related products)
Clean F.R.
Electro pneumatic regulator
Air booster
Speed control valve
Silencer
Check valve / others
Joint / tube
Vacuum filter
Vacuum regulator
Suction plate
Magnetic spring buffer
Mechanical pressure SW
Electronic pressure SW
Contact / close contact cont. SW
Air sensor
Pressure SW for coolant
Small flow sensor
Small flow controller
Flow sensor for air
Flow sensor for water
Total air system
Total air system (Gamma)
Ending

Dimensions: Bulk head female, single elbow, female, elbow, elbow

● Bulk head female MJS*-*-E

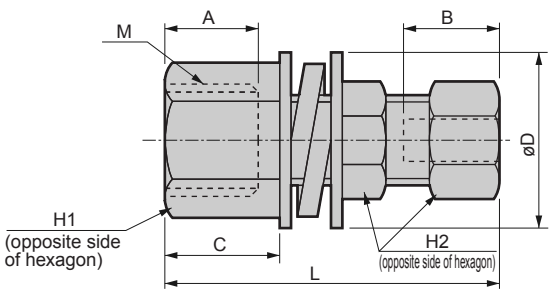

* L and B dimensions show rough dimensions before fixing nut. Mounting plate thickness 4mm or less

	Model no.	Applicable tube O.D.ø	M	H11	H2	L	A	B	C	Installation hole diameter	Min. bore size	Effective sectional area (mm²)	D
★	MJS4-6-E	4	Rc1/8	12	10	34	8	11	9.5	9	3	5.2	18
	MJS6-8-E	6	Rc1/4	17	12	40	11	11.5	13	11	4.5	13.2	22
	MJS8-8-E	8	Rc1/4	17	14	42.5	11	13	13	13	6	25.6	24
★	MJS10-10-E	10	Rc3/8	20	17	45.5	12	14.5	14	15	8	40.1	28

Model No. with "*" is available as custom order. Consult with CKD.

● Single elbow MJL*-*

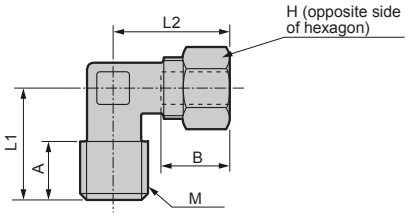

* L2 and B dimensions show rough dimensions before fixing nut.

Model no.	Applicable tube O.D.ø	M	H	L1	L2	A	B	Min. bore size	Effective sectional area (mm²)
MJL4-6	4	R1/8	10	17	20	8	11	3	3.7
MJL4-8	4	R1/4	10	20	20	11	11	3	4.0
MJL6-6	6	R1/8	12	17	20.5	8	11.5	4.5	7.8
MJL6-8	6	R1/4	12	20	20.5	11	11.5	4.5	7.8
MJL6-10	6	R3/8	12	24	23.5	12	11.5	4.5	8.1
MJL8-6	8	R1/8	14	18	23	8	13	6	18.1
MJL8-8	8	R1/4	14	21	23	11	13	6	16.8
MJL8-10	8	R3/8	14	24	25	12	13	6	18.5
MJL10-8	10	R1/4	17	23	26.5	11	14.5	8	31.4
MJL10-10	10	R3/8	17	24	26.5	12	14.5	8	31.4
MJL10-15	10	R1/2	17	28	28.5	15	14.5	8	32.8
MJL12-8	12	R1/4	19	24	29	11	16	9	46.6
MJL12-10	12	R3/8	19	25	29	12	16	10	48.1
MJL12-15	12	R1/2	19	28	29	15	16	10	49.8
MJL15-10	15	R3/8	23	26	34	12	19	12	88.3
MJL15-15	15	R1/2	23	29	34	15	19	12	92.2

● Female, elbow MJL*-*-M

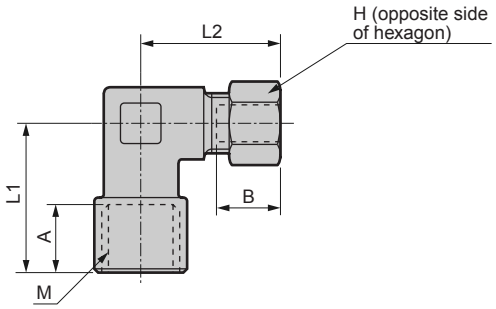

* L2 and B dimensions show rough dimensions before fixing nut.

	Model no.	Applicable tube O.D.ø	M	H	L1	L2	A	B	Min. bore size	Effective sectional area (mm²)
★	MJL4-6-M	4	Rc1/8	10	18.5	20	8	11	3	4.1
★	MJL4-8-M	4	Rc1/4	10	24	22.5	11	11	3	4.7
	MJL6-6-M	6	Rc1/8	12	18.5	20.5	8	11.5	4.5	9.4
	MJL6-8-M	6	Rc1/4	12	24	23.5	11	11.5	4.5	12.8
★	MJL6-10-M	6	Rc3/8	12	27	25.5	12	11.5	4.5	13.6
★	MJL8-6-M	8	Rc1/8	14	19.5	23	8	13	6	13.6
	MJL8-8-M	8	Rc1/4	14	24	25	11	13	6	21.0
★	MJL8-10-M	8	Rc3/8	14	27	27	12	13	6	22.8
★	MJL10-8-M	10	Rc1/4	17	24	26.5	11	14.5	8	29.3
★	MJL10-10-M	10	Rc3/8	17	27	28.5	12	14.5	8	35.7
★	MJL12-8-M	12	Rc1/4	19	25	29	11	16	10	29.3
★	MJL12-10-M	12	Rc3/8	19	27	29	12	16	10	51.4

Model No. with "*" is available as custom order. Consult with CKD.

● Elbow MJL*-0

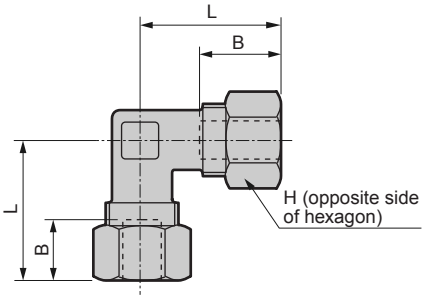

* L and B dimensions show rough dimensions before fixing nut.

Model no.	Applicable tube O.D.ø	H	L	B	Min. bore size	Effective sectional area (mm²)
MJL4-0	4	10	20	11	3	3.6
MJL6-0	6	12	20.5	11.5	4.5	9.4
MJL8-0	8	14	23	13	6	20.7
MJL10-0	10	17	26.5	14.5	8	33.1
MJL12-0	12	19	29	16	10	49.5
MJL15-0	15	23	34	19	12	85.4

Dimensions: Turn elbow, both push-in branch, D type union Tee, Union Tee

CAD

● Turn elbow MJL*-*-T

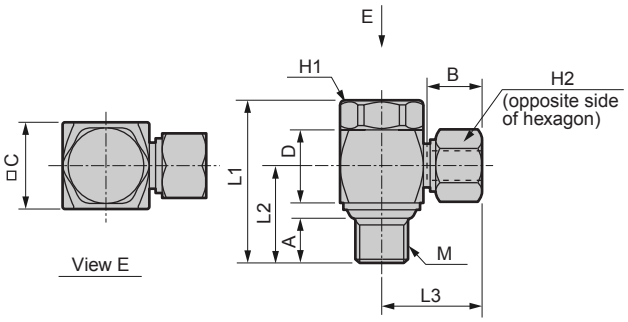

* L3 and B dimensions show rough dimensions before fixing nut.

Model no.	Applicable tube O.D.ø	M	H1	H2	L1	L2	L3	A	B	C	D	Effective sectional area (mm²)
MJL4-6-T	4	R1/8	14	10	29.5	17.6	18	8	11	15	13.5	3.9
MJL6-6-T	6	R1/8	14	12	29.5	17.6	19	8	11.5	15	13.5	8.3
MJL6-8-T	6	R1/4	19	12	36.5	22.1	21.5	11	11.5	20	16.5	9.7
MJL8-6-T	8	R1/8	14	14	29.5	17.6	20.5	8	13	15	13.5	13.7
MJL8-8-T	8	R1/4	19	14	36.5	22.1	23	11	13	20	16.5	18.0
MJL10-8-T	10	R1/4	19	17	36.5	22.1	24.5	11	14.5	20	16.5	27.4
MJL10-10-T	10	R3/8	22	17	42	25	26.5	12	14.5	24	20	33.9
MJL12-10-T	12	R3/8	22	19	42	25	28	12	16	24	20	42.4
MJL12-15-T	12	R1/2	24	19	52.5	32	29.5	15	16	27	27	45.5
MJL15-15-T	15	R1/2	24	23	52.5	32	32.5	15	19	27	27	64.5

● Both push-in branch MJT*-*

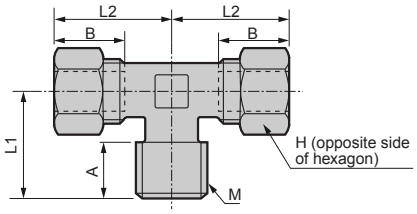

* L2 and B dimensions show rough dimensions before fixing nut.

Model no.	Applicable tube O.D.ø	M	H	L1	L2	A	B	Min. bore size	Effective sectional area (mm²)
MJT4-6	4	R1/8	10	17	20	8	11	3	6.7
MJT4-8	4	R1/4	10	20	20	11	11	3	6.6
MJT6-6	6	R1/8	12	17	20.5	8	11.5	4.5	12.4
MJT6-8	6	R1/4	12	20	20.5	11	11.5	4.5	14.4
MJT6-10	6	R3/8	12	24	23.5	12	11.5	4.5	15.0
MJT8-6	8	R1/8	14	18	23	8	13	6	27.8
MJT8-8	8	R1/4	14	21	23	11	13	6	28.9
MJT8-10	8	R3/8	14	24	25	12	13	6	32.8
MJT10-8	10	R1/4	17	23	26.5	11	14.5	8	46.6
MJT10-10	10	R3/8	17	24	26.5	12	14.5	8	46.6
MJT10-15	10	R1/2	17	28	28.5	15	14.5	8	66.2
MJT12-8	12	R1/4	19	24	29	11	16	10	61.1
MJT12-10	12	R3/8	19	25	29	12	16	10	80.5
MJT12-15	12	R1/2	19	28	29	15	16	10	76.0
MJT15-10	15	R3/8	23	26	34	12	19	12	105.4
MJT15-15	15	R1/2	23	29	34	15	19	12	105.4

● D type union Tee MJT*-*-D

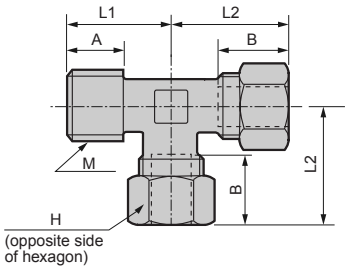

* L2 and B dimensions show rough dimensions before fixing nut.

Model no.	Applicable tube O.D.ø	M	H	L1	L2	A	B	Min. bore size	Effective sectional area (mm²)
MJT4-6-D	4	R1/8	10	17	20	8	11	3	7.6
MJT4-8-D	4	R1/4	10	20	20	11	11	3	7.8
MJT6-6-D	6	R1/8	12	17	20.5	8	11.5	4.5	13.1
MJT6-8-D	6	R1/4	12	20	20.5	11	11.5	4.5	15.7
MJT6-10-D	6	R3/8	12	24	23.5	12	11.5	4.5	14.4
MJT8-6-D	8	R1/8	14	18	23	8	13	6	27.3
MJT8-8-D	8	R1/4	14	21	23	11	13	6	28.9
MJT8-10-D	8	R3/8	14	24	25	12	13	6	36.1
MJT10-8-D	10	R1/4	17	23	26.5	11	14.5	8	48.1
MJT10-10-D	10	R3/8	17	24	26.5	12	14.5	8	49.8
MJT10-15-D	10	R1/2	17	28	28.5	15	14.5	8	68.1
MJT12-8-D	12	R1/4	19	24	29	11	16	10	65.6
MJT12-10-D	12	R3/8	19	25	29	12	16	10	76.0
MJT12-15-D	12	R1/2	19	28	29	15	16	10	80.3
MJT15-10-D	15	R3/8	23	26	34	12	19	12	110.4
MJT15-15-D	15	R1/2	23	29	34	15	19	12	110.4

● Union Tee MJT*-0

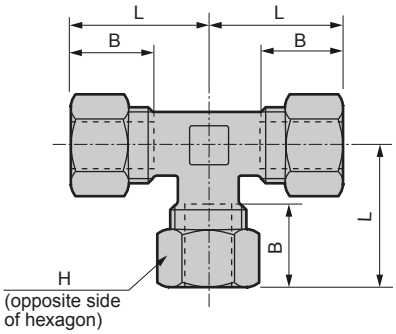

* L and B dimensions show rough dimensions before fixing nut.

Model no.	Applicable tube O.D.ø	H	L	B	Min. bore size	Effective sectional area (mm²)
MJT4-0	4	10	20	11	3	4.4
MJT6-0	6	12	20.5	11.5	4.5	7.2
MJT8-0	8	14	23	13	6	19.0
MJT10-0	10	17	26.5	14.5	8	36.1
MJT12-0	12	19	29	16	10	52.6
MJT15-0	15	23	34	19	12	100.8

Refrigerating type dryer
Desiccant type dryer
High polymer membrane type dryer
Air filter
Auto. drain / others
F.R.L. (Module unit)
F.R.L. (Separate)
Compact F.R.
Precise regulator
F.R.L. (Related products)
Clean F.R.
Electro pneumatic regulator
Air booster
Speed control valve
Silencer
Check valve / others
Joint / tube
Vacuum filter
Vacuum regulator
Suction plate
Magnetic spring buffer
Mechanical pressure SW
Electronic pressure SW
Contact / close contact cont. SW
Air sensor
Pressure SW for coolant
Small flow sensor
Small flow controller
Flow sensor for air
Flow sensor for water
Total air system
Total air system (Gamma)
Ending

Dimensions: Female union Tee, sleeve, insert ring

● Female, union Tee MJT*-*-M

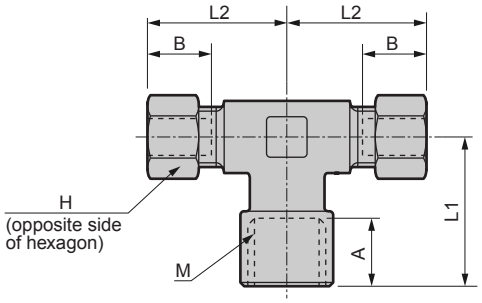

* L2 and B dimensions show rough dimensions before fixing nut.

	Model no.	Applicable tube O.D.ø	M	H	L1	L2	A	B	Min. bore size	Effective sectional area (mm²)
★	MJT4-6-M	4	Rc1/8	10	18.5	20	8	11	3	7.6
★	MJT4-8-M	4	Rc1/4	10	24	22.5	11	11	3	8.6
	MJT6-6-M	6	Rc1/8	12	18.5	20.5	8	11.5	4.5	13.9
	MJT6-8-M	6	Rc1/4	12	24	23.5	11	11.5	4.5	22.9
★	MJT6-10-M	6	Rc3/8	12	27	25.5	12	11.5	4.5	24.3
★	MJT8-6-M	8	Rc1/8	14	19.5	23	8	13	6	14.3
	MJT8-8-M	8	Rc1/4	14	24	25	11	13	6	29.2
★	MJT8-10-M	8	Rc3/8	14	27	27	12	13	6	40.0
★	MJT10-8-M	10	Rc1/4	17	24	26.5	11	14.5	8	29.2
★	MJT10-10-M	10	Rc3/8	17	27	28.5	12	14.5	8	53.7
★	MJT12-8-M	12	Rc1/4	19	26	29	11	16	10	29.5
★	MJT12-10-M	12	Rc3/8	19	27	29	12	16	10	63.8

Model No. with "*" is available as custom order. Consult with CKD.

● Sleeve MJN*-0
Material C3604BD

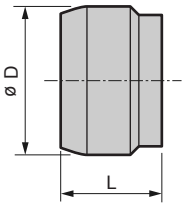

Model no.	Applicable tube O.D.ø	øD	L
MJN4-0	4	6	6
MJN6-0	6	8	6
MJN8-0	8	10	7
MJN10-0	10	12	8
MJN12-0	12	14	8.5
MJN15-0	15	18	10.5

● Insert ring MJ**-O
Material C3604BD

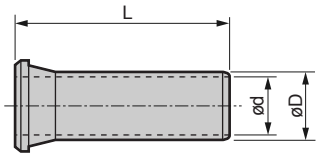

Installation procedures
Insert the tube into the cap nut and the sleeve in this turn, then insert the insert ring into the root of tube. Insert the tube into the joint until it stops, then couple the cap nut and the joint.

Model no.	L	øD	ød (Bore size)	Comformity tube
MJU4-0	12	1.8	1.1	U-9504
MJU6-0	15	3.6	2.8	U-9506
MJU8-0	16	4.8	4	U-9508
MJU10-0	17	6.3	5.5	U-9510
MJU12-0	18	7.8	7	U-9512
MJF4-0	12	2.3	1.5	F-1504
MJF6-0	15	3.8	3	F-1506
MJF8-0	16	5.6	4.5	F-1508
MJF10-0	17	7.1	6.2	F-1510
MJF12-0	18	8.8	8	F-1512
MJF15-0	20	11.3	10.3	F-1515