Large main line filter
AF5000 (oil free)

■ **Components for air preparation and pressure adjustment / main line unit / air filter**

Overview

For oil free compressor, stainless steel vessel is used to eliminate anxiety of rust occurrence, and to supply perfect clean high quality air.

Features

(1) SUS vessel provided
For oil free, SUS304 is used for all models.

(2) Incorporated energy saving element

(3) Unique drainage system
Forcible discharge method, while new automatic drain with air loss zero system is used.

(4) Remote control possible
Element replacement information is issued by differential pressure switch outputting alarm signal.

(5) Simple element replacement
Remove the top flange, and just turn the screw on the element.

CONTENTS

Product introduction 198
Applicable circuit 200
⚠ Safety precautions 202

- Pre-filter (AF5000P) 204
- Oil removing filter (AF5000S) 208
- High performance oil removing filter (AF5000M) 212
- Activated charcoal filter (AF5000X) 216

Providing total oil-free specifications from refrigerating air dryer to filter by incorporating stainless steel vessel

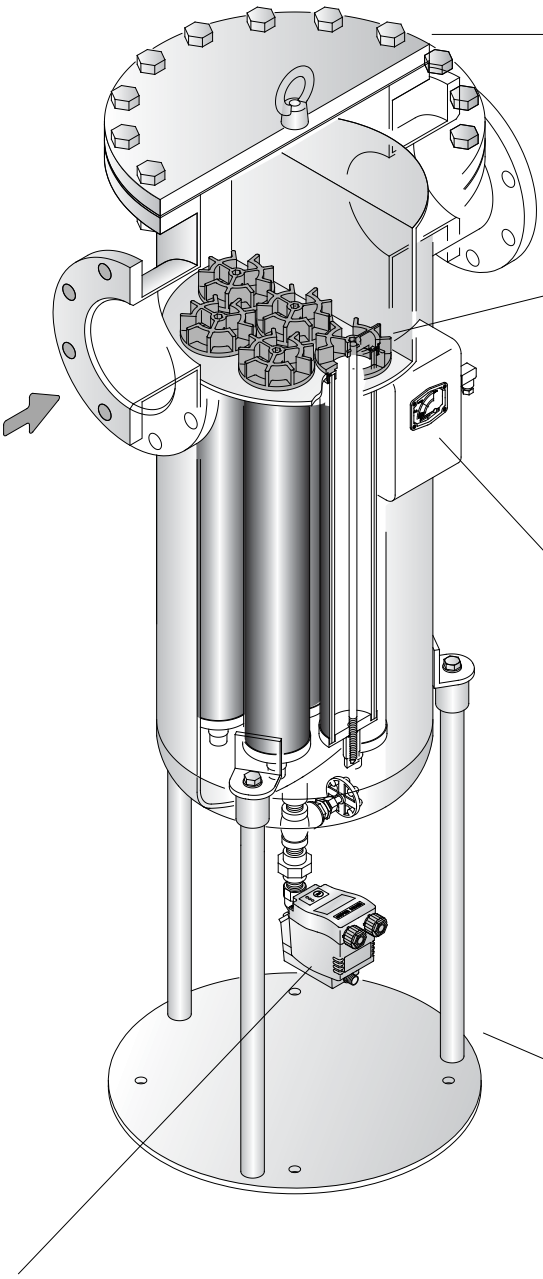

■ Stainless steel vessel incorporated for all models (SUS304)

Truly clean air is supplied without rust forming. Light weight (10 to 20% (CKD comparison))

■ Easily replace element

A screw method is used for element installation, so the element is replaced by removing the upper flange.
Stainless steel is used for threads, so it does not stick due to rust.

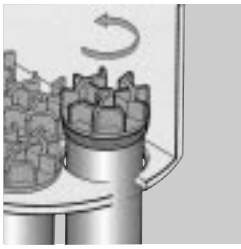

■ Remote control possible

An indicator with a differential pressure switch is standard, installed on the front.
The element replacement interval is confirmed beforehand.
An alarm signal is output from the differential switch, providing an accurate reading and enabling remote control.

■ Easy installation

Installation legs have been prepared as a standard, making piping work easy. (Excluding AF5016)
The legs are removed when not required.

■ Automatic drain with no air loss sensor prevents wasted air consumption (Provided as standard on P and S types)

The highly reliable drain lower end sensor and solenoid valve have been integrated in this new energy-saving drain discharger. While air is discharged with the drainage when using the float type or disk type drain discharger, this product detects the lower water level during drainage discharge, so air is not wasted and discharged when discharging the drainage. An alarm signal is output, enabling remote control. (200 VAC power supply is required)

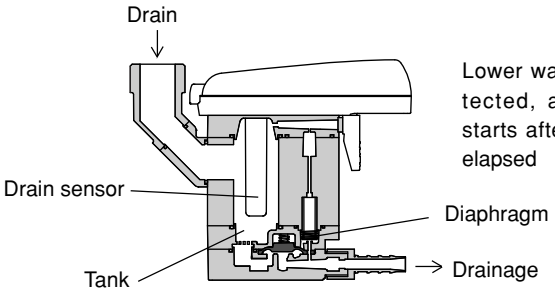

Lower water level is detected, and discharge starts after set time has elapsed

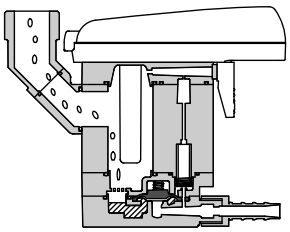

Lower water level is detected again and drainage stops

■ Long life, low pressure loss element

Element service life curve

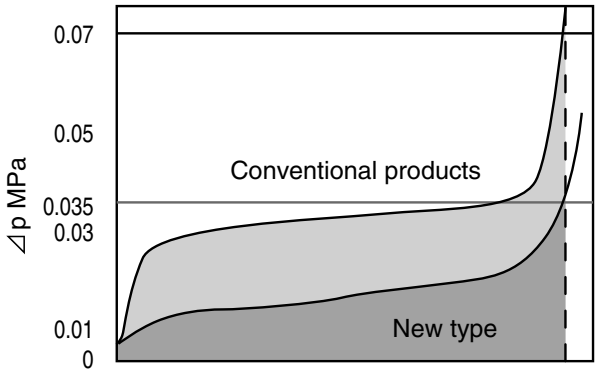

- The pressure loss is half of the conventional.
- The element is replaced when the pressure drops to 0.035MPa.
- The element life is one year or longer when used under normal conditions.

Element replacement
One year or more in normal state

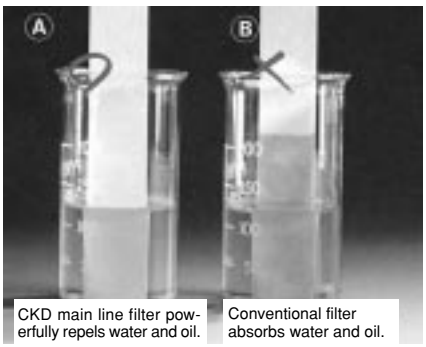

CKD main line filter powerfully repels water and oil. Conventional filter absorbs water and oil.

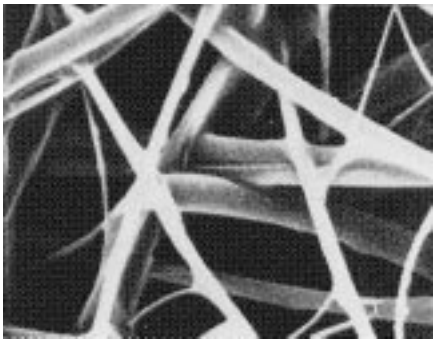

Ⓐ New filter

"Polysilicate glass microfibers" used in the filtration layer powerfully repel water and oil, allowing the pressure drop and running costs to be minimized.

Ⓑ Conventional filter

Conventional glass microfibers absorb water and oil, so pressure easily drops, filtration performance decreases, and operation costs increase.

The high 96% gap rate in the element fibers realizes a low pressure loss and long life

*P*Type
Main line filter

(Pre-filter)

For air dryer prefilter

- Contaminating substances 3μm or larger are removed
- Water drip separation rate 95%

CKD's original chemical fiber structure permanent element has been adopted for the 3μm element.
This structure dose not clog easily and realized long-life and low pressure-loss.

*S*Type
Oil mist filter

(Oil removing filter)

Protecting expensive pneumatic components

- Contaminating substances 0.3μm or larger are removed
- Oil up to secondary side oil concentration of 0.5mg/m³ (21˚C) is removed

*M*Type
Oil mist filter

(High performance oil removing filter)

For oil inhibited pneumatic circuit

- Contaminating substances 0.01μm or larger are removed
- Oil up to secondary side oil concentration of 0.01mg/m³ (21˚C) is removed

Polysilicate micro fibers quickly separate oil and limit pressure loss.
A long life is realized with a 96% gap rate in element fibers.

*X*Type
Oil mist filter

(Activated charcoal filter)

For odor inhibited pneumatic circuit

- Absorb particles with activated carbon
- Vapor oil and odors up to secondary side oil concentration of 0.003mg/m³ (21˚C) is removed

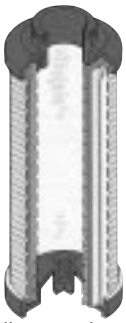

Cylindrically wound particle activated carbon absorbs oil vapor molecules and odor molecules with a low pressure loss.
This filter is configured of a high concentration of activated carbon, so a long element life is realized.

Refrigerating type dryer
Desiccant type dryer
High polymer membrane type dryer
Air filter
Auto. drain / others
F.R.L. (Module unit)
F.R.L. (Separate)
Compact F.R.
Precise regulator
F.R.L. (Related products)
Clean F-R.
Electro pneumatic regulator
Air booster
Speed control valve
Silencer
Check valve / others
Joint / tube
Vacuum filter
Vacuum regulator
Suction plate
Magnetic spring buffer
Mechanical pressure SW
Electronic pressure SW
Contact / close contact cont. SW
Air sensor
Pressure SW for coolant
Small flow sensor
Small flow controller
Flow sensor for air
Flow sensor for water
Total air system
Total air system (Gamma)
Ending

■ Typical system circuit used in main line

Oil-free

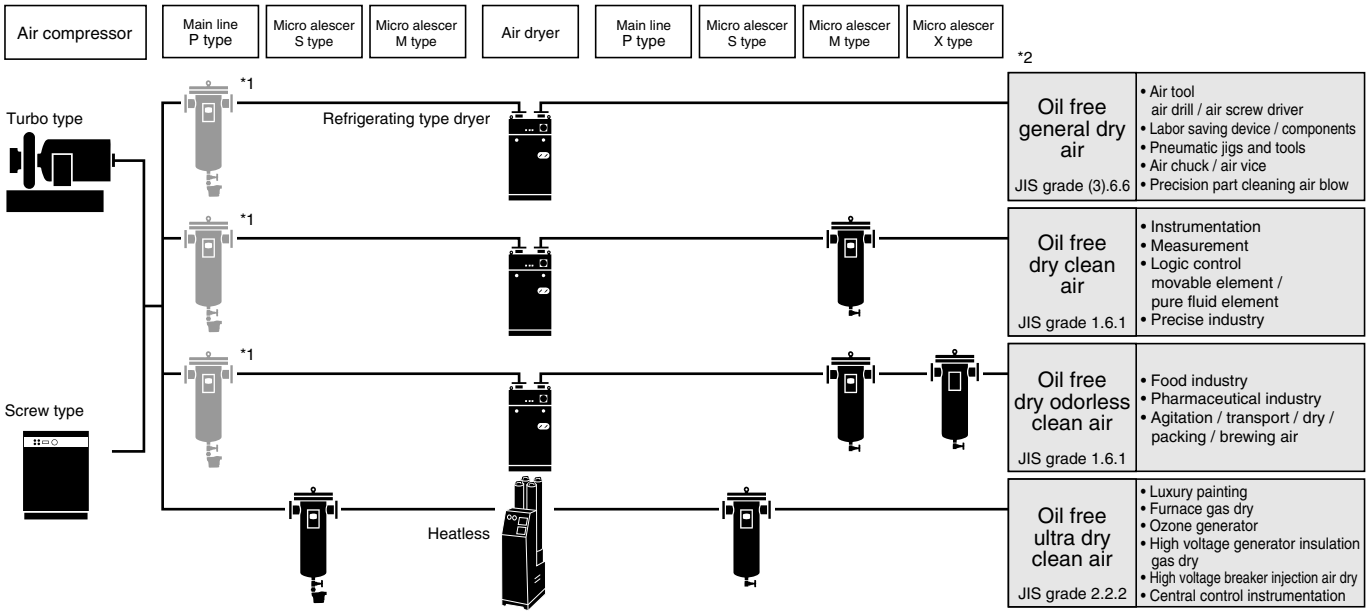

Lubrication type

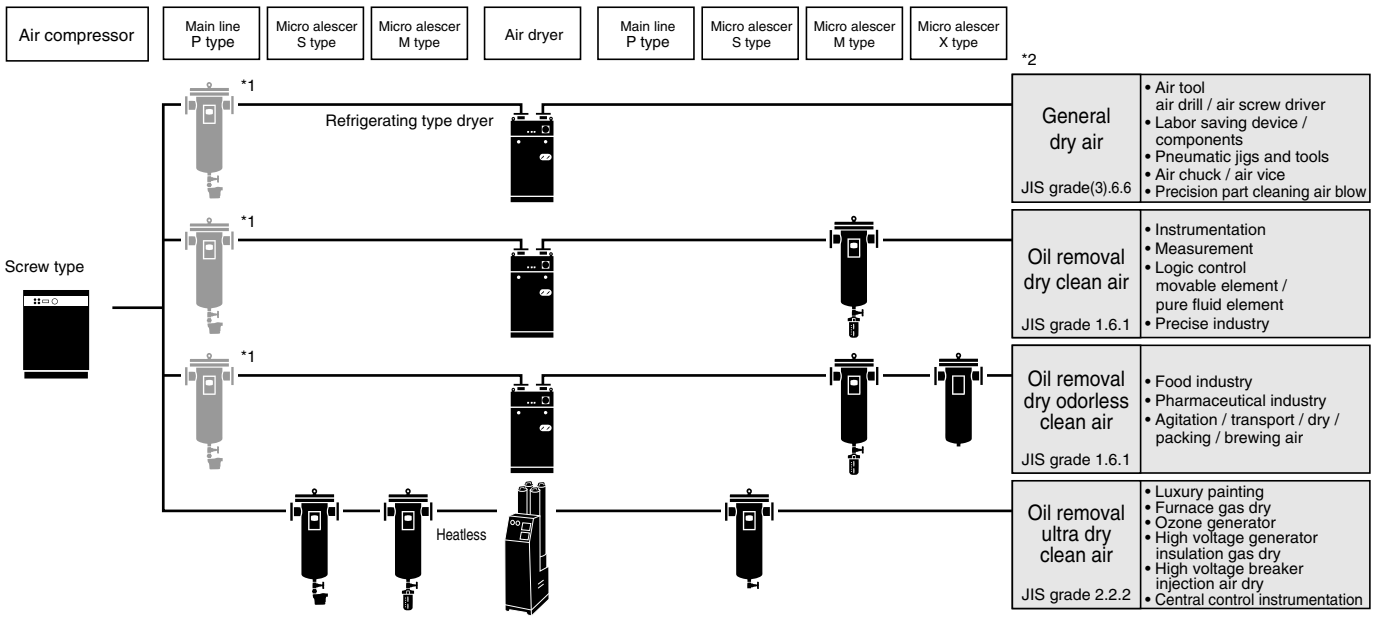

*1. Use rust proof pipes (zinc plating, lining and stainless steel pipes, etc.).
If there is a high probability that a lot of rust and peelings could be generated in the inside of pipe, install a main filter AF5000 Series P type to the primary side of dryer.
*2. Install a filter removing impurities and contaminants generated in the pipe just before pneumatic components.

● Compressed air quality grade JIS B 8392-1: 2000

Grade	Max. particle diameter (μm)	Minimum pressure dew point (˚C)	Max. oil concentration (mg/m³)
1	0.1	-70	0.01
2	1	-40	0.1
3	5	-20	1
4	15	+ 3	5
5	40	+ 7	25
6	–	+ 10	–

For example,
Grade 1.4.1 shows the grade that solid particle 0.1μm, pressure dew point +3˚C and oil content density 0.01mg/m³.

■ Wide variation

4 types 40 models are available.
The appropriate model can be selected per flow rate and air quality.

AF5016P-50

Flow rate code		Element type		Port size	
016	16m³/min. (ANR)	P	P type	50	Flange 2B
032	32m³/min. (ANR)	S	S type	80	Flange 3B
048	48m³/min. (ANR)	M	M type	100	Flange 4B
064	64m³/min. (ANR)	X	X type	150	Flange 6B
080	80m³/min. (ANR)			200	Flange 8B
096	96m³/min. (ANR)				
128	128m³/min. (ANR)				
160	160m³/min. (ANR)				
192	192m³/min. (ANR)				
256	256m³/min. (ANR)				

■ Easy design equipment

Each series with same flow rate has same dimension and same port size to enable easy design and installation.
Type can be changed only with changing the element.

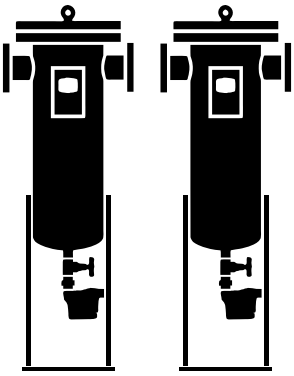

Main line component (main line filter)

Safety precautions

Always read this section before starting use.
Refer to Intro 67 for general precautions.

Large main line filter AF5000 Series

Manufacturer's Liability

⚠WARNING

■ The manufacturer cannot be held liable in the following cases:

- Serious errors in use occur due to the operator.
- Illegal modifications or repairs using nonstandard parts by user.

Working environment

⚠WARNING

■ Avoid direct sunlight and rain water. The resin parts, etc., could deteriorate and break.

■ Avoid use in the area containing corrosive gas.

■ Use this product within the range of working temperature.

■ Do not use the product where it could freeze. The accumulated drainage could freeze and damage the product.

■ Do not use in dangerous places (atmosphere with risk of explosions, etc.).

■ The inlet temperature should be kept as low as possible.
The oil removing rate will drop if the temperature is high.

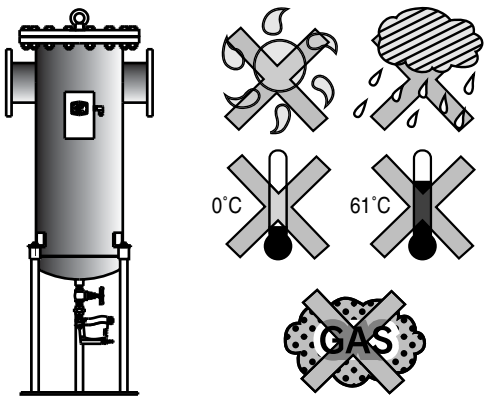

Installation

⚠CAUTION

■ "Class 2 pressure vessel" according to "safety regulation of boiler and pressure vessel" in Occupational Safety Sanitation Laws is applied in model no. AF5032 to AF5256.

■ Model AF5032 to AF5256 have a Class 2 pressure vessel withstand pressure proof certificate. This certificate must be kept in safe-keeping while using this product. (Applications to the Labor Standards Supervision Office are no longer required in Japan.)

■ This product may be used only in Japan.
(Consult with CKD for use overseas.)

■ Install this product on a stable, flat surface not subject to vibration.

■ Do not step onto this product.

■ When piping, remove cutting oil and rust proof oil, etc.

■ Secure enough space for maintenance and inspection.

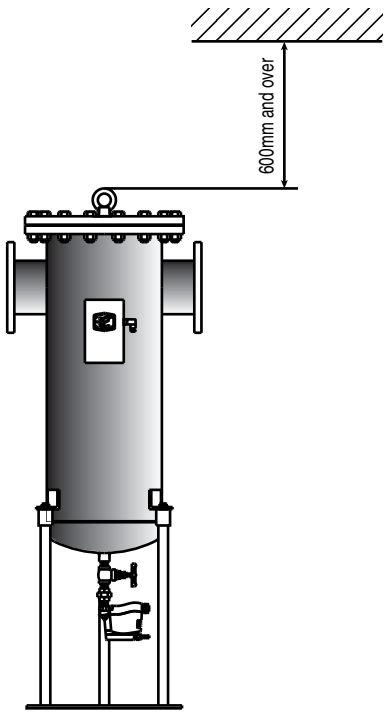

■ The element and differential pressure indicator could be damaged if air is passed suddenly. When installing valves, etc., before and after this product, do not operate the valves suddenly.
Do not install this filter in a system where a reverse flow could occur or where impact could be applied easily.

■ Flash the drain piping before installing to remove any foreign matter from inside.

■ Connect a tube pipe, etc., to the drain port.

■ Drainage is discharged with pressure, so securely fix the piping at the drain port so that drainage does not splatter.

■ If the drain port piping slopes upward, the minimum working pressure will increase by 0.01MPa per 1m. Make sure that the upward sloping piping does not exceed 5m.

Operation

⚠CAUTION

■ A differential pressure indicator is provided as standard. Use this to judge element life.

■ Do not flow air in reverse.
Do not pressurize suddenly.
Otherwise, original performance may not be attained.

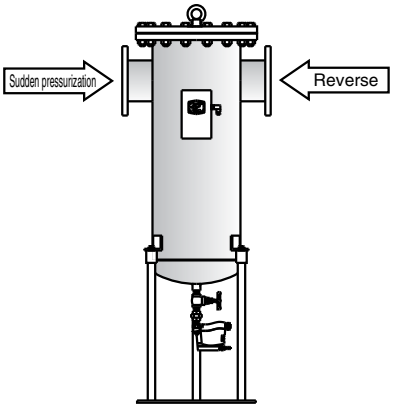

(Automatic drain)

■ Use within a range of ±10% of the rated voltage 200 VAC.

■ Use this product within working pressure range.

■ The drain outlet closes when the power is OFF, so drainage will not be discharged. Drainage will be discharged only when power is ON, so leave the power ON at all times during use.

Inspection and maintenance

⚠CAUTION

■ The air filter life is spent when the pressure drops to 0.035MPa or after one year of use, whichever is sooner.
Change the all elements when the life span is reached. X Series can not control service life with the differential pressure. Replace the filter after 1000 hours of use or when the deodorizing effect is lost.

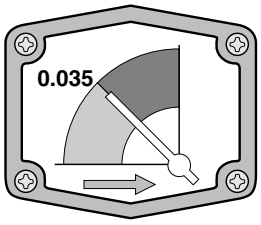

(Automatic drain: DBV1003)

■ Check whether the Power indicator is ON.

■ Check whether the Alarm indicator is OFF.

■ Press the TEST button, and confirm that drainage is discharged. Note that the alarm mode is entered if the button is held down for more than a minute. (Alarm is output)

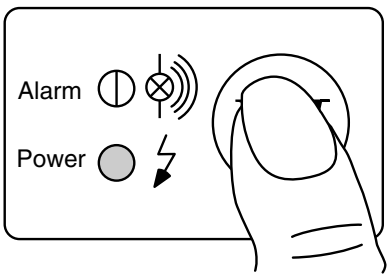

■ Maintenance and repairs must always be done in nonpressurized state with power turned OFF.

■ Use only genuine repair parts.

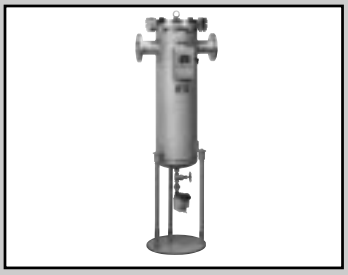

Main line filter

AF5000P Series

Pre-filter of air dryer

Flow rate range: 16 to 256m³/min. (ANR)

JIS symbol

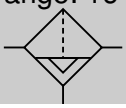

CAD

Specifications

Model no. / Descriptions		AF5016P-50	AF5032P-80	AF5048P-100	AF5064P-100	AF5080P-150	AF5096P-150	AF5128P-150	AF5160P-200	AF5192P-200	AF5256P-200
Treating air flow rate (Note 2. Note 3.) m³/min. (ANR)		16	32	48	64	80	96	128	160	192	256
Working fluid		Compressed air									
Working pressure	MPa	0.08 to 1.0									
Withstanding pressure	MPa	1.5									
Ambient temperature range	˚C	5 to 60									
Filtration rating	μm	3									
Pressure drop	Initial MPa	Within 0.005									
	Regular MPa	0.01									
	Element change MPa	0.035									
Element quantity		1	2	3	4	5	6	8	10	12	16
Port size	(Note 1) Flange	2B	3B	4B	4B	6B	6B	6B	8B	8B	8B
Product weight	kg	38	76	78	107	140	167	223	232	269	330
Differential pressure switch											
Operating differential pressure	MPa	0.04 ± 0.01									
Contact		1 pole a contact									
Maximum contact current	A	0.5									
Maximum contact voltage	VDC	200									
Maximum contact capacitance	W	10									
Maximum contact resistance (including reed switch)	mΩ	300									
Automatic drain (model no.: DBV1003)											
Drain port size		(Note 4) G1/4 or 8 to 10mm hose joint									
Power supply		Single phase 200 VAC 50/60Hz									

Note 1. Flange is 10K flange.
Note 2. Treating air flow rate is the atmospheric pressure conversion value where inlet pressure is 0.7MPa and initial pressure drop is 0.005MPa.
Note 3. ANR shows conditions where 20˚C atmospheric pressure and relative humidity 65%.
Note 4. G1/4 allows R1/4 connection.

Flow rate compensation coefficient

If working pressure is other than 0.7MPa, multiply treated air flow rate by following coefficient.

Pressure (MPa)	0.1	0.2	0.3	0.4	0.5	0.6	0.7	0.8	0.9	1.0
Compensation coefficient	0.38	0.53	0.65	0.76	0.85	0.93	1.0	1.07	1.13	1.2

How to order

AF5 016 P - 50 - X1

Ⓐ Flow rate code

Ⓑ Port size

Ⓒ Option

Symbol	Descriptions
Ⓐ Flow code m³/min. (ANR)	
016	16
032	32
048	48
064	64
080	80
096	96
128	128
160	160
192	192
256	256

Ⓑ Port size

Flow rate code		016	032	048	064	080	096	128	160	192	256
50	Flange 2B	●	–	–	–	–	–	–	–	–	–
80	Flange 3B	–	●	–	–	–	–	–	–	–	–
100	Flange 4B	–	–	●	●	–	–	–	–	–	–
150	Flange 6B	–	–	–	–	●	●	●	–	–	–
200	Flange 8B	–	–	–	–	–	–	–	●	●	●

Ⓒ Option

Blank	Standard products	
D	Automatic drain 5100-4C (Note 1)	Note 1
E	Without automatic drain	
K	Coupling flange attached	
H	English documentation	
H1	Export packing	
H2	SUS name plate	
L	Anchor bolt , nut attached (SS400) (Note 2)	Note 2
L1	Anchor bolt , nut attached (SUS304) (Note 2)	Note 2
X1	IN-OUT reverse direction (Note 3)	Note 3
Y2	Product photo	Note 5

⚠ Note on model no. selection

Note 1: "D" automatic drain 5100-4c is recommended for a working environment where unable to electric wire.
Note 2: "L" and "L1" are applicable to AF5032P to AF5256P.
Note 3: Viewed from the front, a standard product has air inlet on the left port, while air outlet on the right port.
For "X1", air inlet is provided on the right port, while air outlet is provided on the left port.
Note 4: The required performance may not be attained if using at a level less than the selected pressure. Always select the model with the working pressure.
Note 5: When ordering several options, indicate the required options in alphabetical order.

<Example of model number>

AF5016P-50-X1

Model: Main line filter AF5000P Series

Ⓐ Flow rate code : 16m³/min. (ANR)

Ⓑ Port size : Flange 2B

Ⓒ Option : IN-OUT reverse direction

Refrigerating type dryer
Desiccant type dryer
High polymer membrane type dryer
Air filter
Auto. drain / others
F.R.L. (Module unit)
F.R.L. (Separate)
Compact F.R.
Precise regulator
F.R.L. (Related products)
Clean F-R.
Electro pneumatic regulator
Air booster
Speed control valve
Silencer
Check valve / others
Joint / tube
Vacuum filter
Vacuum regulator
Suction plate
Magnetic spring buffer
Mechanical pressure SW
Electronic pressure SW
Contact / close contact cont. SW
Air sensor
Pressure SW for coolant
Small flow sensor
Small flow controller
Flow sensor for air
Flow sensor for water
Total air system
Total air system (Gamma)
Ending

Dimensions

● AF5016P

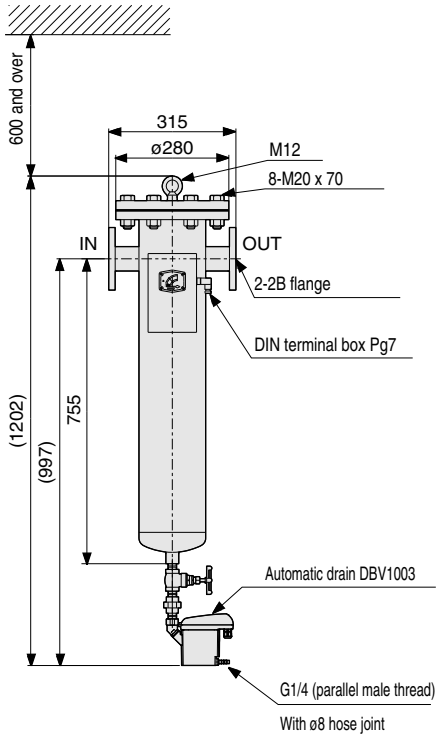

● AF5032P to AF5256P

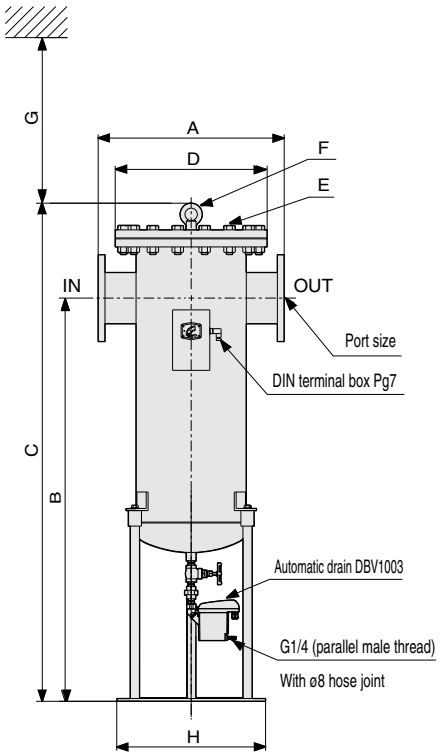

● Anchor bolt hole dimension

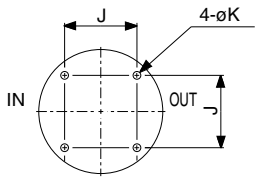

Model no.	Port size	A	B	C	D	E	F	G	H	J	K
AF5032P-80	Flange 3B	500	1255	1495	ø400	12-M22 x 80	M12	600	ø380	210	ø15
AF5048P-100	Flange 4B	500	1255	1495	ø400	12-M22 x 80	M12	600	ø380	210	ø15
AF5064P-100	Flange 4B	550	1270	1522	ø445	16-M22 x 80	M16	600	ø440	250	ø15
AF5080P-150	Flange 6B	600	1300	1606	ø490	16-M22 x 80	M20	600	ø480	280	ø15
AF5096P-150	Flange 6B	650	1320	1630	ø560	16-M24 x 90	M20	600	ø540	320	ø15
AF5128P-150	Flange 6B	700	1350	1693	ø620	20-M24 x 90	M20	600	ø610	350	ø15
AF5160P-200	Flange 8B	700	1350	1693	ø620	20-M24 x 90	M20	600	ø610	350	ø15
AF5192P-200	Flange 8B	750	1360	1709	ø675	20-M24 x 100	M20	600	ø670	400	ø15
AF5256P-200	Flange 8B	850	1400	1786	ø745	20-M30 x 110	M24	600	ø730	450	ø15

Repair parts list

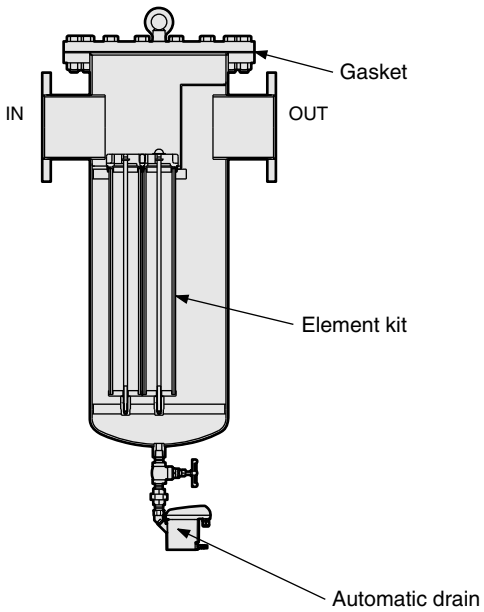

● Ordering method

Flow rate code m³/min. (ANR)	Gasket	Element kit	Automatic drain
16	AF5016P-GASKET	AF5016P-ELEMENT-KIT	AF-DBV1003-15-AC200V
32	AF5032P-GASKET	AF5032P-ELEMENT-KIT	
48	AF5048P-GASKET	AF5048P-ELEMENT-KIT	
64	AF5064P-GASKET	AF5064P-ELEMENT-KIT	
80	AF5080P-GASKET	AF5080P-ELEMENT-KIT	
96	AF5096P-GASKET	AF5096P-ELEMENT-KIT	
128	AF5128P-GASKET	AF5128P-ELEMENT-KIT	
160	AF5160P-GASKET	AF5160P-ELEMENT-KIT	
192	AF5192P-GASKET	AF5192P-ELEMENT-KIT	
256	AF5256P-GASKET	AF5256P-ELEMENT-KIT	

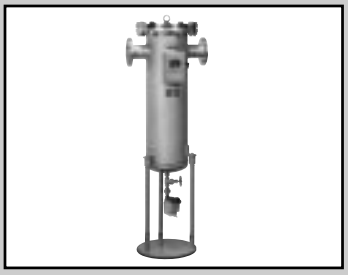

Micro alescer

AF5000S Series

Protecting expensive pneumatic components
Flow rate range: 16 to 256m³/min. (ANR)

JIS symbol

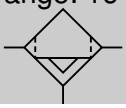

CAD

Specifications

Model no. / Descriptions		AF5016S-50	AF5032S-80	AF5048S-100	AF5064S-100	AF5080S-150	AF5096S-150	AF5128S-150	AF5160S-200	AF5192S-200	AF5256S-200
Treating air flow rate (Note 2. Note 3.) m³/min. (ANR)		16	32	48	64	80	96	128	160	192	256
Working fluid		Compressed air									
Working pressure	MPa	0.08 to 1.0									
Withstanding pressure	MPa	1.5									
Ambient temperature range	˚C	5 to 60									
Filtration rating	μm	0.3									
Secondary side oil concentration	mg/m³	0.5 (at inlet air 21˚C or less)									
Pressure drop	Initial MPa	0.007									
	Regular MPa	0.014									
	Element change MPa	0.035									
Element quantity		1	2	3	4	5	6	8	10	12	16
Port size	(Note 1) Flange	2B	3B	4B	4B	6B	6B	6B	8B	8B	8B
Product weight	kg	38	76	78	107	140	167	223	232	269	330
Differential pressure switch											
Operating differential pressure	MPa	0.04 ± 0.01									
Contact		1 pole a contact									
Maximum contact current	A	0.5									
Maximum contact voltage	VDC	200									
Maximum contact capacitance	W	10									
Maximum contact resistance (including reed switch)	mΩ	300									
Automatic drain (model no.: DBV1003)											
Drain port size		(Note 4) G1/4 or ø8 to 10mm hose joint									
Power supply		Single phase 200 VAC 50/60Hz									

Note 1. Flange is 10K flange.
Note 2. Treating air flow rate is the atmospheric pressure conversion value where inlet pressure is 0.7MPa and initial pressure drop is 0.007MPa.
Note 3. ANR shows conditions where 20˚C atmospheric pressure and relative humidity 65%.
Note 4. G1/4 allows R1/4 connection.

Flow rate compensation coefficient

If working pressure is other than 0.7MPa, multiply treated air flow rate by following coefficient.

Pressure (MPa)	0.1	0.2	0.3	0.4	0.5	0.6	0.7	0.8	0.9	1.0
Compensation coefficient	0.38	0.53	0.65	0.76	0.85	0.93	1.0	1.07	1.13	1.2

How to order

AF5 016 S - 50 - X1

Ⓐ Flow rate code

Ⓑ Port size

Ⓒ Option

Note 1
Note 2
Note 3
Note 5

Symbol	Descriptions
Ⓐ Flow rate code m³/min. (ANR)	
016	16
032	32
048	48
064	64
080	80
096	96
128	128
160	160
192	192
256	256

Ⓑ Port size

Flow rate code		016	032	048	064	080	096	128	160	192	256
50	Flange 2B	●	–	–	–	–	–	–	–	–	–
80	Flange 3B	–	●	–	–	–	–	–	–	–	–
100	Flange 4B	–	–	●	●	–	–	–	–	–	–
150	Flange 6B	–	–	–	–	●	●	●	–	–	–
200	Flange 8B	–	–	–	–	–	–	–	●	●	●

Ⓒ Option

Blank	Standard products
D	Automatic drain 5100-4C (Note 1)
E	Without automatic drain
K	Coupling flange attached
H	English documentation
H1	Export packing
H2	SUS name plate
L	Anchor bolt , nut attached (SS400) (Note 2)
L1	Anchor bolt , nut attached (SUS304) (Note 2)
X1	IN-OUT reverse direction (Note 3)
Y2	Product photo

⚠ Note on model no. selection

Note 1: "D" automatic drain 5100-4c is recommended for a working environment where unable to electric wire.
Note 2: "L" and "L1" are applicable to AF5032S to AF5256S.
Note 3: Viewed from the front, a standard product has air inlet on the left port, while air outlet on the right port.
For "X1", air inlet is provided on the right port, while air outlet is provided on the left port.
Note 4: The required performance may not be attained if using at a level less than the selected pressure. Always select the model with the working pressure.
Note 5: When ordering several options, indicate the required options in alphabetical order.

<Example of model number>

AF5016S-50-X1

Model: Main line filter AF5000S Series

Ⓐ Flow rate code : 16m³/min. (ANR)
Ⓑ Port size : Flange 2B
Ⓒ Option : IN-OUT reverse direction

Refrigerating type dryer
Desiccant type dryer
High polymer membrane type dryer
Air filter
Auto. drain / others
F.R.L. (Module unit)
F.R.L. (Separate)
Compact F.R.
Precise regulator
F.R.L. (Related products)
Clean F-R.
Electro pneumatic regulator
Air booster
Speed control valve
Silencer
Check valve / others
Joint / tube
Vacuum filter
Vacuum regulator
Suction plate
Magnetic spring buffer
Mechanical pressure SW
Electronic pressure SW
Contact / close contact cont. SW
Air sensor
Pressure SW for coolant
Small flow sensor
Small flow controller
Flow sensor for air
Flow sensor for water
Total air system
Total air system (Gamma)
Ending

Dimensions

● AF5016S

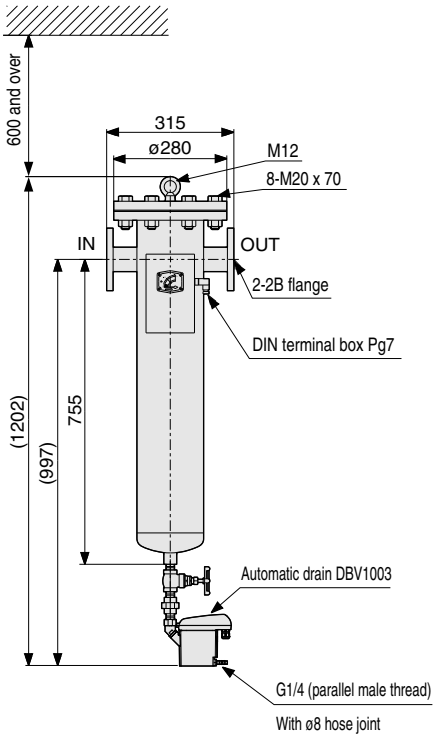

● AF5032S to AF5256S

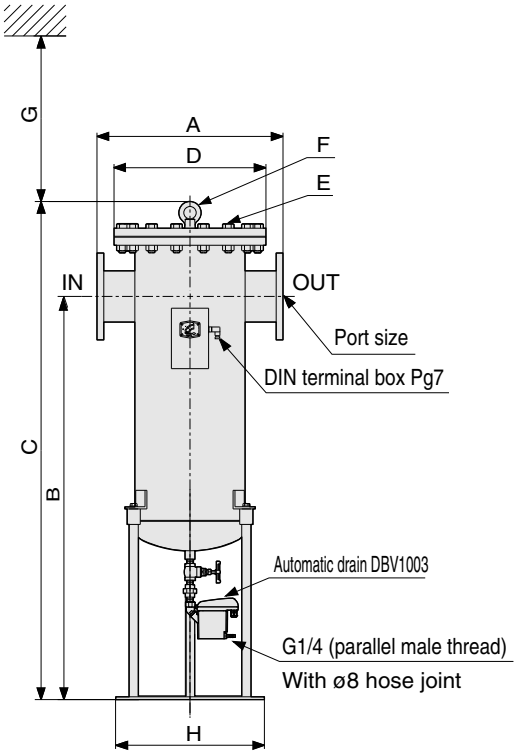

● Anchor bolt hole dimension

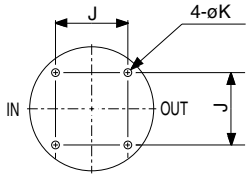

Model no.	Port size	A	B	C	D	E	F	G	H	J	K
AF5032S-80	Flange 3B	500	1255	1495	ø400	12-M22 x 80	M12	600	ø380	210	ø15
AF5048S-100	Flange 4B	500	1255	1495	ø400	12-M22 x 80	M12	600	ø380	210	ø15
AF5064S-100	Flange 4B	550	1270	1522	ø445	16-M22 x 80	M16	600	ø440	250	ø15
AF5080S-150	Flange 6B	600	1300	1606	ø490	16-M22 x 80	M20	600	ø480	280	ø15
AF5096S-150	Flange 6B	650	1320	1630	ø560	16-M24 x 90	M20	600	ø540	320	ø15
AF5128S-150	Flange 6B	700	1350	1693	ø620	20-M24 x 90	M20	600	ø610	350	ø15
AF5160S-200	Flange 8B	700	1350	1693	ø620	20-M24 x 90	M20	600	ø610	350	ø15
AF5192S-200	Flange 8B	750	1360	1709	ø675	20-M24 x 100	M20	600	ø670	400	ø15
AF5256S-200	Flange 8B	850	1400	1786	ø745	20-M30 x 110	M24	600	ø730	450	ø15

Repair parts list

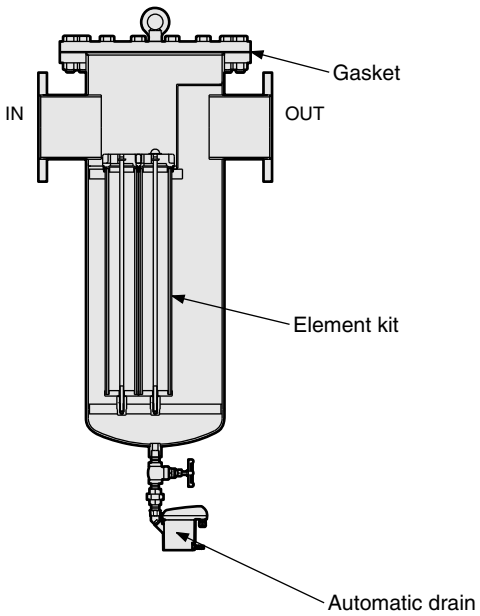

● Ordering method

Flow rate code m³/min. (ANR)	Gasket	Element kit	Automatic drain
16	AF5016P-GASKET	AF5016S-ELEMENT-KIT	AF-DBV1003-15-AC200V
32	AF5032P-GASKET	AF5032S-ELEMENT-KIT	
48	AF5048P-GASKET	AF5048S-ELEMENT-KIT	
64	AF5064P-GASKET	AF5064S-ELEMENT-KIT	
80	AF5080P-GASKET	AF5080S-ELEMENT-KIT	
96	AF5096P-GASKET	AF5096S-ELEMENT-KIT	
128	AF5128P-GASKET	AF5128S-ELEMENT-KIT	
160	AF5160P-GASKET	AF5160S-ELEMENT-KIT	
192	AF5192P-GASKET	AF5192S-ELEMENT-KIT	
256	AF5256P-GASKET	AF5256S-ELEMENT-KIT	

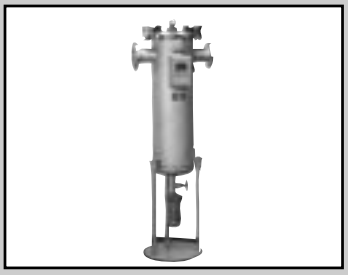

Micro alescer

AF5000M Series

For oil inhibited pneumatic circuit

Flow rate range: 16 to 256m³/min. (ANR)

JIS symbol

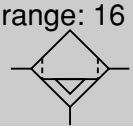

CAD

Specifications

Model no. / Descriptions			AF5016M-50	AF5032M-80	AF5048M-100	AF5064M-100	AF5080M-150	AF5096M-150	AF5128M-150	AF5160M-200	AF5192M-200	AF5256M-200
Treating air flow rate (Note 2. Note 3.)		m³/min. (ANR)	16	32	48	64	80	96	128	160	192	256
Working fluid			Compressed air									
Working pressure		MPa	0.08 to 1.0									
Withstanding pressure		MPa	1.5									
Ambient temperature range		˚C	5 to 60									
Filtration rating		μm	0.01									
Secondary side oil concentration		mg/m³	0.01 (at inlet air 21˚C or less)									
Pressure drop	Initial	MPa	0.01									
	Regular	MPa	0.02									
	Element change	MPa	0.035									
Element quantity			1	2	3	4	5	6	8	10	12	16
Port size		(Note 1) Flange	2B	3B	4B	4B	6B	6B	6B	8B	8B	8B
Product weight		kg	38	76	78	107	140	167	223	232	269	330
Differential pressure switch												
Operating differential pressure		MPa	0.04 ± 0.01									
Contact			1 pole a contact									
Maximum contact current		A	0.5									
Maximum contact voltage		VDC	200									
Maximum contact capacitance		W	10									
Maximum contact resistance (including reed switch)		mΩ	300									
Automatic drain (model no.: 5100-4C)												
Drain port size			Rc 1/4									

Note 1. Flange is 10K flange.
Note 2. Treating air flow rate is the atmospheric pressure conversion value where inlet pressure is 0.7MPa and initial pressure drop is 0.01MPa.
Note 3. ANR shows conditions where 20˚C atmospheric pressure and relative humidity 65%.

Flow rate compensation coefficient

If working pressure is other than 0.7MPa, multiply treated air flow rate by following coefficient.

Pressure (MPa)	0.1	0.2	0.3	0.4	0.5	0.6	0.7	0.8	0.9	1.0
Compensation coefficient	0.38	0.53	0.65	0.76	0.85	0.93	1.0	1.07	1.13	1.2

How to order

AF5 016 M- 50 - X1

Ⓐ Flow rate code

Ⓑ Port size

Ⓒ Option

Note 1
Note 2
Note 4

Symbol	Descriptions
Ⓐ Flow code m³/min. (ANR)	
016	16
032	32
048	48
064	64
080	80
096	96
128	128
160	160
192	192
256	256

Ⓑ Port size

Flow rate code		016	032	048	064	080	096	128	160	192	256
50	Flange 2B	●	–	–	–	–	–	–	–	–	–
80	Flange 3B	–	●	–	–	–	–	–	–	–	–
100	Flange 4B	–	–	●	●	–	–	–	–	–	–
150	Flange 6B	–	–	–	–	●	●	●	–	–	–
200	Flange 8B	–	–	–	–	–	–	–	●	●	●

Ⓒ Option	
Blank	Standard products
E	Without automatic drain
K	Coupling flange attached
H	English documentation
H1	Export packing
H2	SUS name plate
L	Anchor bolt , nut attached (SS400) (Note 1)
L1	Anchor bolt , nut attached (SUS304) (Note 1)
X1	IN-OUT reverse direction (Note 3)
Y2	Product photo

Note on model no. selection

Note 1: "L" and "L1" are compatible with AF5032M to AF5256M.
Note 2: Viewed from the front, a standard product has air inlet on the left port, while air outlet on the right port.
For "X1", air inlet is provided on the right port, while air outlet is provided on the left port.
Note 3: The required performance may not be attained if using at a level less than the selected pressure. Always select the model with the working pressure.
Note 4: When ordering several options, indicate the required options in alphabetical order.

<Example of model number>

AF5016M-50-X1

Model: Main line filter AF5000M Series

Ⓐ Flow rate code : 16m³/min. (ANR)
Ⓑ Port size : Flange 2B
Ⓒ Option : IN-OUT reverse direction

Refrigerating type dryer
Desiccant type dryer
High polymer membrane type dryer
Air filter
Auto. drain / others
F.R.L. (Module unit)
F.R.L. (Separate)
Compact F.R.
Precise regulator
F.R.L. (Related products)
Clean F-R.
Electro pneumatic regulator
Air booster
Speed control valve
Silencer
Check valve / others
Joint / tube
Vacuum filter
Vacuum regulator
Suction plate
Magnetic spring buffer
Mechanical pressure SW
Electronic pressure SW
Contact / close contact cont. SW
Air sensor
Pressure SW for coolant
Small flow sensor
Small flow controller
Flow sensor for air
Flow sensor for water
Total air system
Total air system (Gamma)
Ending

Dimensions

● AF5016M

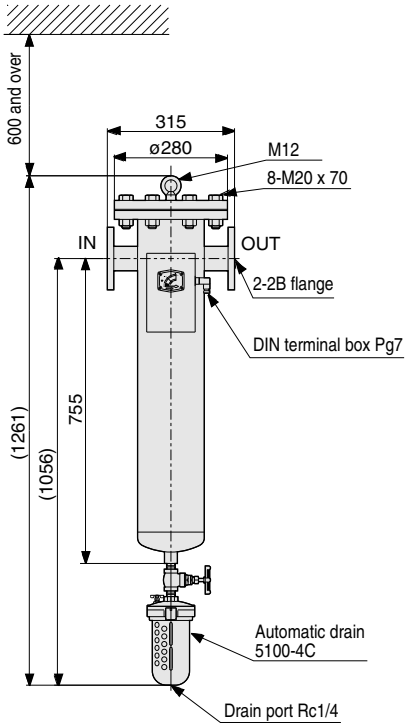

● AF5032M to AF5256M

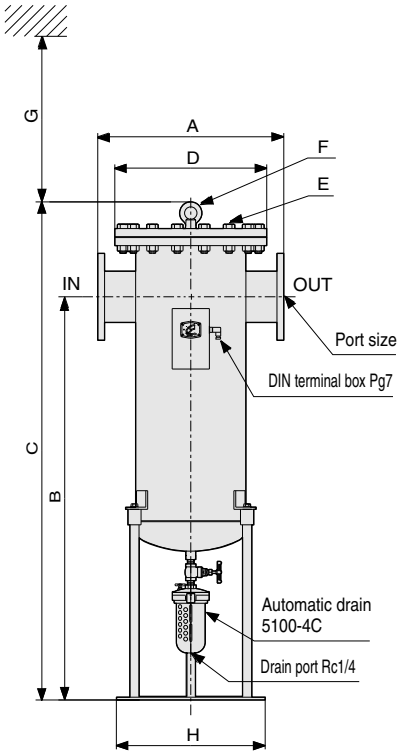

● Anchor bolt hole dimension

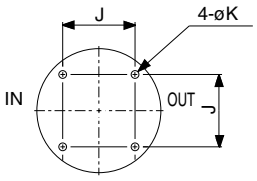

Model no.	Port size	A	B	C	D	E	F	G	H	J	K
AF5032M-80	Flange 3B	500	1255	1495	ø400	12-M22 x 80	M12	600	ø380	210	ø15
AF5048M-100	Flange 4B	500	1255	1495	ø400	12-M22 x 80	M12	600	ø380	210	ø15
AF5064M-100	Flange 4B	550	1270	1522	ø445	16-M22 x 80	M16	600	ø440	250	ø15
AF5080M-150	Flange 6B	600	1300	1606	ø490	16-M22 x 80	M20	600	ø480	280	ø15
AF5096M-150	Flange 6B	650	1320	1630	ø560	16-M24 x 90	M20	600	ø540	320	ø15
AF5128M-150	Flange 6B	700	1350	1693	ø620	20-M24 x 90	M20	600	ø610	350	ø15
AF5160M-200	Flange 8B	700	1350	1693	ø620	20-M24 x 90	M20	600	ø610	350	ø15
AF5192M-200	Flange 8B	750	1360	1709	ø675	20-M24 x 100	M20	600	ø670	400	ø15
AF5256M-200	Flange 8B	850	1400	1786	ø745	20-M30 x 110	M24	600	ø730	450	ø15

Repair parts list

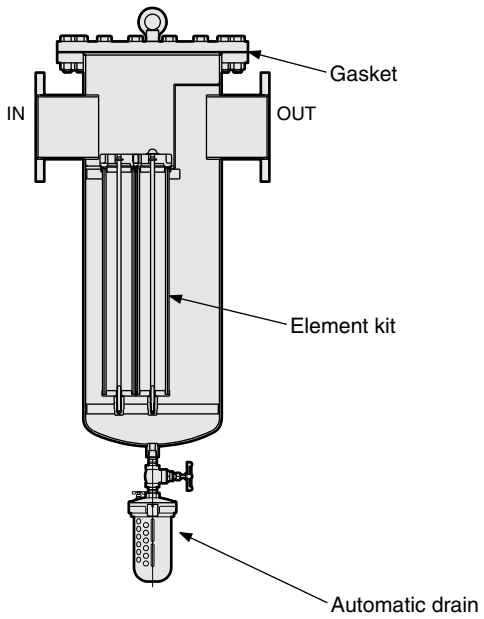

● Ordering method

Flow rate code m3/min. (ANR)	Gasket	Element kit	Automatic drain
16	AF5016P-GASKET	AF5016M-ELEMENT-KIT	5100-4C
32	AF5032P-GASKET	AF5032M-ELEMENT-KIT	
48	AF5048P-GASKET	AF5048M-ELEMENT-KIT	
64	AF5064P-GASKET	AF5064M-ELEMENT-KIT	
80	AF5080P-GASKET	AF5080M-ELEMENT-KIT	
96	AF5096P-GASKET	AF5096M-ELEMENT-KIT	
128	AF5128P-GASKET	AF5128M-ELEMENT-KIT	
160	AF5160P-GASKET	AF5160M-ELEMENT-KIT	
192	AF5192P-GASKET	AF5192M-ELEMENT-KIT	
256	AF5256P-GASKET	AF5256M-ELEMENT-KIT	

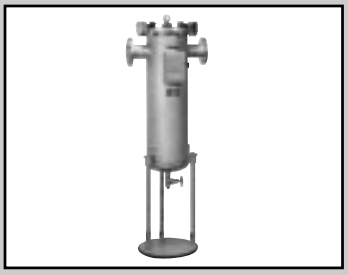

Micro alescer

AF5000X Series

For odor inhibited pneumatic circuit
Flow rate range: 16 to 256m³/min. (ANR)

JIS symbol 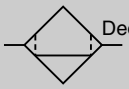 Deodorization

CAD

Specifications

Model no. / Descriptions	AF5016X-50	AF5032X-80	AF5048X-100	AF5064X-100	AF5080X-150	AF5096X-150	AF5128X-150	AF5160X-200	AF5192X-200	AF5256X-200
Treating air flow rate (Note 2. Note 3.) m³/min. (ANR)	16	32	48	64	80	96	128	160	192	256
Working fluid	Compressed air									
Working pressure MPa	0.08 to 1.0									
Withstanding pressure MPa	1.5									
Ambient temperature range ˚C	5 to 30									
Filtration method	Absorption by activated charcoal									
Secondary side oil concentration mg/m³	0.003 (at inlet air 21˚C or less)									
Initial pressure drop MPa	Within 0.007									
Element quantity	1	2	3	4	5	6	8	10	12	16
Port size (Note 1) Flange	2B	3B	4B	4B	6B	6B	6B	8B	8B	8B
Product weight kg	38	76	78	107	140	167	223	232	269	330

Note 1. Flange is 10K flange.
Note 2. Treating air flow rate is the atmospheric pressure conversion value where inlet pressure is 0.7MPa and initial pressure drop is 0.007MPa.
Note 3. ANR shows conditions where 20˚C atmospheric pressure and relative humidity 65%.

Flow rate compensation coefficient

If working pressure is other than 0.7MPa, multiply treated air flow rate by following coefficient.

Pressure (MPa)	0.1	0.2	0.3	0.4	0.5	0.6	0.7	0.8	0.9	1.0
Compensation coefficient	0.38	0.53	0.65	0.76	0.85	0.93	1.0	1.07	1.13	1.2

How to order

AF5 016 X - 50 - X1

Ⓐ Flow rate code

Ⓑ Port size

Ⓒ Option

Note 1
Note 2
Note 4

Symbol	Descriptions
Ⓐ Flow rate code m³/min. (ANR)	
016	16
032	32
048	48
064	64
080	80
096	96
128	128
160	160
192	192
256	256

Ⓑ Port size

Flow rate code		016	032	048	064	080	096	128	160	192	256
50	Flange 2B	●	–	–	–	–	–	–	–	–	–
80	Flange 3B	–	●	–	–	–	–	–	–	–	–
100	Flange 4B	–	–	●	●	–	–	–	–	–	–
150	Flange 6B	–	–	–	–	●	●	●	–	–	–
200	Flange 8B	–	–	–	–	–	–	–	●	●	●

Ⓒ Option	
Blank	Standard products
K	Coupling flange attached
H	English documentation
H1	Export packing
H2	SUS name plate
L	Anchor bolt , nut attached (SS400) (Note 1)
L1	Anchor bolt , nut attached (SUS304) (Note 1)
X1	IN-OUT reverse direction (Note 2)
Y2	Product photo

⚠ Note on model no. selection

Note 1: "L" and "L1" are applicable to AF5032X to AF5256X.
Note 2: Viewed from the front, a standard product has air inlet on the left port, while air outlet on the right port.
For "X1", air inlet is provided on the right port, while air outlet is provided on the left port.
Note 3: The required performance may not be attained if using at a level less than the selected pressure. Always select the model with the working pressure.
Note 4: When ordering several options, indicate the required options in alphabetical order.

<Example of model number>
AF5016X-50-X1
Model: Main line filter AF5000X Series
Ⓐ Flow rate code : 16m³/min. (ANR)
Ⓑ Port size : Flange 2B
Ⓒ Option : IN-OUT reverse direction

Refrigerating type dryer
Desiccant type dryer
High polymer membrane type dryer
Air filter
Auto. drain / others
F.R.L. (Module unit)
F.R.L. (Separate)
Compact F.R.
Precise regulator
F.R.L. (Related products)
Clean F-R.
Electro pneumatic regulator
Air booster
Speed control valve
Silencer
Check valve / others
Joint / tube
Vacuum filter
Vacuum regulator
Suction plate
Magnetic spring buffer
Mechanical pressure SW
Electronic pressure SW
Contact / close contact cont. SW
Air sensor
Pressure SW for coolant
Small flow sensor
Small flow controller
Flow sensor for air
Flow sensor for water
Total air system
Total air system (Gamma)
Ending

Dimensions

● AF5016X

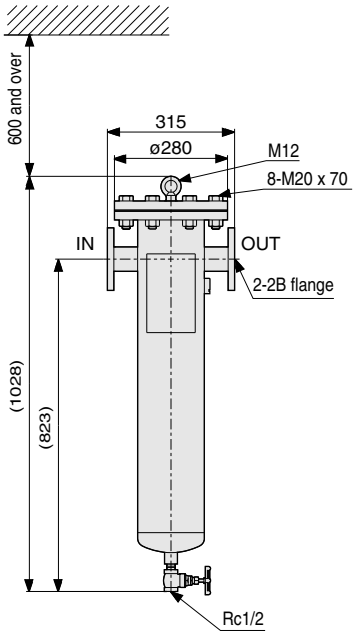

● AF5032X to AF5256X

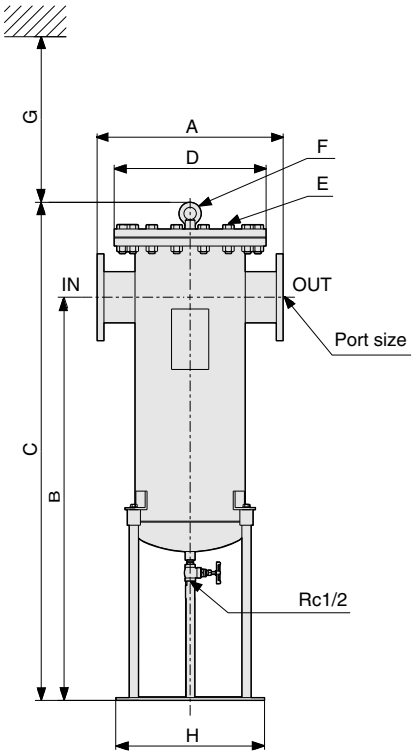

● Anchor bolt hole dimension

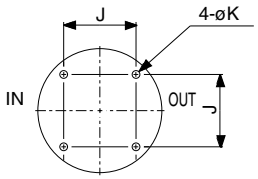

Model no.	Port size	A	B	C	D	E	F	G	H	J	K
AF5032X-80	Flange 3B	500	1255	1495	ø400	12-M22 x 80	M12	600	ø380	210	ø15
AF5048X-100	Flange 4B	500	1255	1495	ø400	12-M22 x 80	M12	600	ø380	210	ø15
AF5064X-100	Flange 4B	550	1270	1522	ø445	16-M22 x 80	M16	600	ø440	250	ø15
AF5080X-150	Flange 6B	600	1300	1606	ø490	16-M22 x 80	M20	600	ø480	280	ø15
AF5096X-150	Flange 6B	650	1320	1630	ø560	16-M24 x 90	M20	600	ø540	320	ø15
AF5128X-150	Flange 6B	700	1350	1693	ø620	20-M24 x 90	M20	600	ø610	350	ø15
AF5160X-200	Flange 8B	700	1350	1693	ø620	20-M24 x 90	M20	600	ø610	350	ø15
AF5192X-200	Flange 8B	750	1360	1709	ø675	20-M24 x 100	M20	600	ø670	400	ø15
AF5256X-200	Flange 8B	850	1400	1786	ø745	20-M30 x 110	M24	600	ø730	450	ø15

Repair parts list

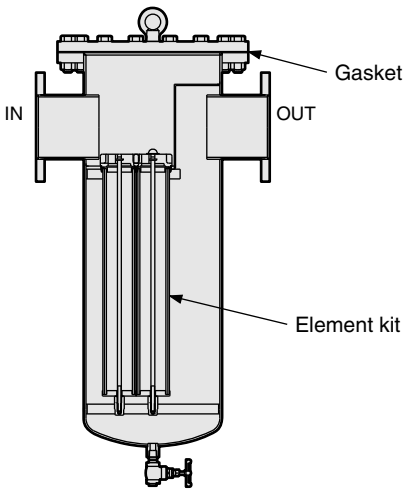

● Ordering method

Flow rate code m³/min. (ANR)	Gasket	Element kit
16	AF5016P-GASKET	AF5016X-ELEMENT-KIT
32	AF5032P-GASKET	AF5032X-ELEMENT-KIT
48	AF5048P-GASKET	AF5048X-ELEMENT-KIT
64	AF5064P-GASKET	AF5064X-ELEMENT-KIT
80	AF5080P-GASKET	AF5080X-ELEMENT-KIT
96	AF5096P-GASKET	AF5096X-ELEMENT-KIT
128	AF5128P-GASKET	AF5128X-ELEMENT-KIT
160	AF5160P-GASKET	AF5160X-ELEMENT-KIT
192	AF5192P-GASKET	AF5192X-ELEMENT-KIT
256	AF5256P-GASKET	AF5256X-ELEMENT-KIT

Note 1. Automatic drain
AF5000X: None