CKD

Responding to advanced needs for semiconductor manufacturing process control

High Purity Chemical Liquid System Component General Catalog

WET FINE SYSTEM

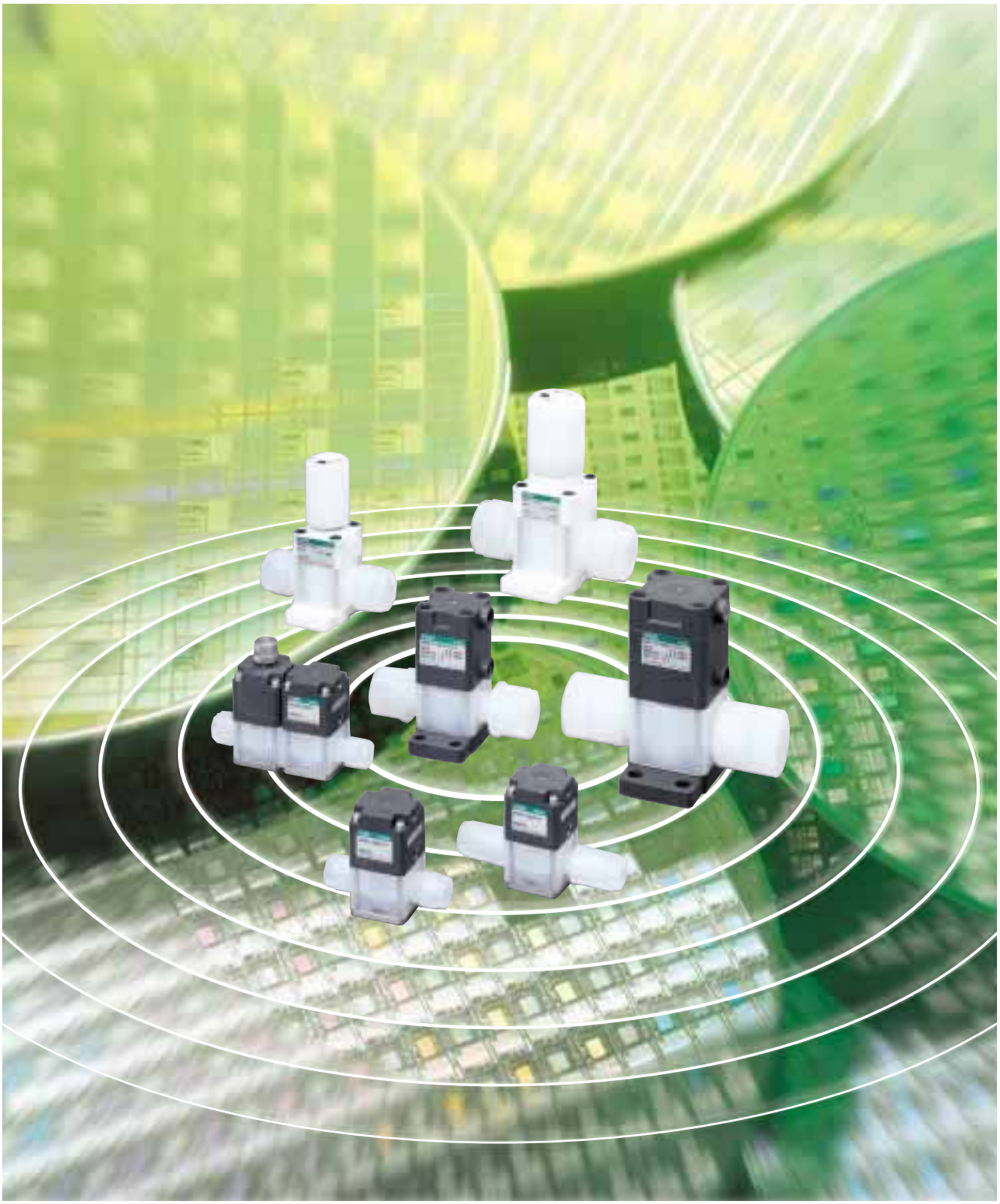

CKD Corporation

CB-031A 2

Responding to Needs for High Purity · Super

Wet Fine Control System

CKD's high purity chemical liquid system components are the answer to advanced needs for semiconductor manufacturing process control.

Class 100 cleanroom

Clean Technologies

Advanced production technology provided by the industry's leader

CKD boasts the industry's top results and superior reliability in process control system components. We provide high-quality products from advanced super- cleanrooms with integrated production covering all steps from design, and assembly to packaging.

Diverse product groups and custom orders

A wide range of system components is available, including chemical liquid valves, manual valves, regulators, units, and sensors. Customized orders are welcomed.

Assorted fitting variations

Six types of fittings by four different manufacturers are available as integrated components for use with various equipment and applications.

Fitting system	Manufacturer
Super type Pillar fitting	NIPPON PILLAR PACKING
Super 300 type Pillar fitting J Series/P Series	NIPPON PILLAR PACKING
F-LOCK 20A series fitting	Flowell
F-LOCK 60 series fitting	Flowell
Final lock fitting	KURABO
FLARTEC fitting	Entegris,Inc.

Targeting higher purity

CKD provides a high degree of cleanness and fine quality by reducing contamination from all angles.

Eco-friendly materials

CKD selects eco-friendly materials by eliminating polyvinyl chlorides, etc., which generate harmful gases.

Wet Fine Control System — Integrated in-house production

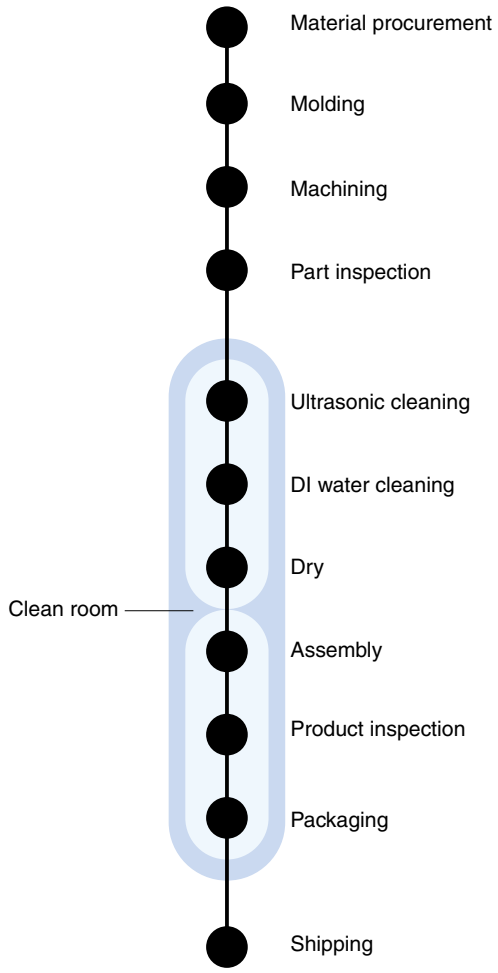

INDEX

	Page
Series variation	Intro 5
⚠ Precautions	Intro 7

		Model No.	Page
Air-operated valve for chemical liquids	2 port valve	AMDZ/AMD0 PFA body	2
		AMD0*2 PFA body	6
		AMD3*2 PFA body	10
		AMD3*2 stainless steel body	16
		AMD4*2 PFA body	20
		AMD4*2 stainless steel body	24
		AMD5*2 PFA body	28
		AMD5*2 stainless steel body	32
		Sister product AMD2/3/4/5*	58
		Bellows valve AMB	66
	3 port valve	AMGZ0/AMG00 PFA body	36
		AMG*02 PFA body	40
	Manifold	GAMD**2 PTFE body	48
	High-pressure specifications	2 port valve AMD3/4/5*2 PFA body	56
		3 port valve AMG3/4/502 PTFE body	
		Manifold 2 port valve GAMD3/4/5*2 PTFE body	
	Flow characteristics		70
Manual valve	2 port valve	MMD*02 PFA body	76
		MMD*02 stainless steel body	84
		Manifold GMMD*02 PTFE body	90
		Sister product MMD*0	98
		Toggle valve TMD*02	102
Drip prevention valve		Drip prevention valve AMS	108
		Integrated air-operated valve for chemical liquid/drip prevention valve AMDS	112
		Electronic control drip prevention valve TQAS0	116
Fine regulator		PYM stainless steel body	122
		PMM10 PTFE body	124
		PMM20 PFA body, high corrosion proof type	126
Fine level switch		KML70 multi-point setting type, 8-point detection type with display	130
		KML60 Multi-point setting type, 4/6-point detection type with internal pressure sensor	134
		KML50 High accuracy (±1mm), 1-point detection type	138
Other high purity chemical liquid components		Microflow adjustment valve	144
		Pilot regulator	146
		Dump valve (2-port valve)	148
		Dump valve (3-port valve)	150
Related components		MN3EO/MN4EO miniature solenoid valve	154
		MN4GA/4GB pilot-operated pneumatic 3, 5-port valve block manifold	154
		4GA/4GB pilot-operated pneumatic 3, 5-port valve	155

Guide to CKD Electronics Catalog	156

Series variation

Valve types	Air operated valve								
	2 port								
Appearance, reference page	AMDZ/0 ··· Page 2	AMD0*2 New ··· Page 6	AMD3*2 PFA body type ··· Page 10 Stainless steel body type ··· Page 16		AMD4*2 PFA body type ··· Page 20 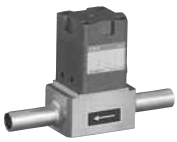 Stainless steel body type ··· Page 24		AMD5*2 PFA body type ··· Page 28 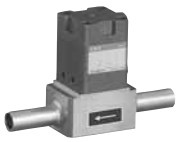 Stainless steel body type ··· Page 32		
Body material	PFA/PTFE body	PFA/PTFE body	PFA/PTFE body	Stainless steel body	PFA/PTFE body	Stainless steel body	PFA/PTFE body	Stainless steel body	
Orifice diameter or suction rate	Ø1.6 to Ø4	Ø3 to Ø4	Ø6.3 to Ø10	Ø8/Ø10	Ø14.7 to Ø16	Ø16	Ø20	Ø20	
Connection (fitting type): Super type Pillar fitting	●	●	●		●		●		
Super 300 type Pillar fitting	●	●	●		●		●		
F-LOCK 20 series fitting	●	●							
F-LOCK 20A series fitting			●		●		●		
F-LOCK 60 series fitting	●	●	●		●		●		
Final lock fitting	●	●	●		●		●		
FLARTEC fitting	●	●	●		●		●		
PVC union joint							●		
Rc thread	●	●		●		●			
SUS weld tube				●		●		●	
Double barbed joint				●		●		●	
Option	With flow rate adjustment	With flow rate adjustment With indicator For ammonia For nitric acid	With flow rate adjustment With indicator With bypass For ammonia For nitric acid/ hydrofluoric acid For high temperatures (5 to 160 ˚C)	With flow rate adjustment With indicator	With flow rate adjustment With indicator With bypass For liquid ammonia For liquid nitric acid/hydrofluoric acid For high temperatures (5 to 160 ˚C)	With flow rate adjustment With indicator	With flow rate adjustment With indicator With bypass For ammonia For nitric acid/ hydrofluoric acid	With flow rate adjustment With indicator	
Application	Coater/developer	Chemical supply system Cleaning system	Chemical supply system Cleaning system		Chemical supply system Cleaning system		Chemical supply system Cleaning system		

Sister product

Air operated valve	Manual valve	Toggle valve
2 port	2 port	2 port
AMD2/3/4/5*··· Page 58 AMB··· Page 66	MMD··· Page 98	TMD··· Page 102
Application: Chemical supply system Cleaning system	Application: Chemical supply system Cleaning system	Application: Chemical supply system Cleaning system

Peripheral devices

Regulator
PYM ··· Page 122 PMM10 ··· Page 124 PMM20 ··· Page 126 ● Connection: Rc1/8/Rc1/4 (Ø8, Ø10 for PMM20.) ● Setting pressure range: 0.02MPa to 0.2MPa
Application: Coater/developer

				Manual valve			Drip prevention valve	Integrated air-operated valve/drip prevention valve
	3 port		Manifold	2 port		Manifold		
	AMGZ/0 ··· Page 36	AMG3/4/502 ··· Page 40	GAMD3/4/5*2 ··· Page 48	MMD3/4/502 PFA body type ··· Page 76 Stainless steel body type ··· Page 84		GMMD3/4/502 ··· Page 90	AMS ··· Page 108	AMDS ··· Page 112
	PFA/PTFE body	PTFE body	PTFE body	PFA/PTFE body	Stainless steel body	PTFE body	PFA/PTFE body	PFA/PTFE body
	Ø1.6 to Ø4	Ø6 to Ø20	Ø6 to Ø20	Ø6.3 to Ø20	Ø8 to Ø20	Ø6 to Ø20	0.04cm^3/0.12cm^3	0.04cm^3/0.12cm^3
	●	●	●	●		●	●	●
	●	●	●	●		●	●	●
	●						●	●
		●	●	●		●		
	●	●	●	●		●	●	●
	●	●	●	●		●	●	●
	●	●	●	●		●	●	●
				●		●		
					●		●	
					●			
					●			
	—	With flow rate adjustment With indicator For ammonia For nitric acid/ hydrofluoric acid For high temperatures (5 to 160 ˚C)	With flow rate adjustment With indicator For ammonia For nitric acid/ hydrofluoric acid For high temperatures (5 to 160 ˚C)	For ammonia For nitric acid/ hydrofluoric acid	Actuator Material: Aluminum	For ammonia For nitric acid/ hydrofluoric acid	—	—
	Coater/developer	Chemical supply system Cleaning system	Chemical supply system Cleaning system	Chemical supply system Cleaning system		Chemical supply system Cleaning system	Coater/developer	Coater/developer

Other high purity chemical liquid components

	Unit: Automatic drip prevention unit	Sensor: Fine level switch
	TQAS ··· Page 116 ● Maximum suction rate : 0.05cm^3 ● Suction time : 0.2sec to 20sec	KML70 ··· Page 130 KML60 ··· Page 134 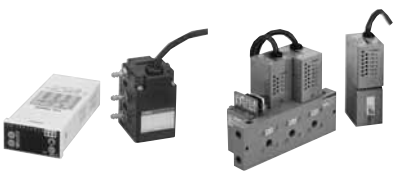 ● Detection point: 8-point setting ● Integrated communication function (RS485) ● Detection point : 4-point/6-point settable KML50 series ··· Page 138 ● Repeatability : ±1mm
	Application: Coater/developer	Application: Cleaning system

Microflow adjustment valve	Pilot regulator
··· Page 144	··· Page 146
Dump valve	
2 port ··· Page 148	3 port ··· Page 150

High purity chemical gas/liquid control systems

Safety Precautions

Always read before starting use

When designing and manufacturing a device using CKD products, the manufacturer is obligated to check that device safety mechanism, pneumatic control circuit, or water control circuit and the system operated by electrical control that controls the devices is secured.
It is important to select, use, handle, and maintain the product appropriately to ensure that the CKD product is used safely.
Observe warnings and precautions to ensure device safety.
Check that device safety is ensured, and manufacture a safe device.

WARNING

1 This product is designed and manufactured as a general industrial machine part.
It must be handled by an operator having sufficient knowledge and experience in handling.

2 Use this product in accordance of specifications.
Contact CKD when using the product outside the unique specifications range, when using it outdoors, and when using it under the conditions and environment below. Do not attempt to modify or additionally machine the product.

❶ Use for special applications requiring safety including nuclear energy, railroad, aviation, ship, vehicle, medical equipment, equipment, or applications coming into contact with beverage or food, amusement equipment, emergency shutoff circuits, press machine, brake circuits, or for safeguard.
❷ Use for applications where life or assets could be adversely affected, and special safety measures are required.

3 Observe corporate standards and regulations, etc., related to the safety of device design and control, etc.
ISO 4414, JIS B 8370 (pneumatic system rules), High Pressure Gas Maintenance Laws Occupational Safety and Sanitation Laws, and other safety regulations, corporate standards, and regulations.

4 Do not handle, pipe, or remove devices before confirming safety.

❶ Inspect and service the machine and devices after confirming safety of the entire system related to this product.
❷ Note that there may be hot or charged sections even after operation is stopped.
❸ When inspecting or servicing the device, turn off the energy source (air supply or water supply), and turn off power to the facility. Discharge any compressed air from the system, and pay enough attention to possible water leakage and leakage of electricity.
❹ When starting or restarting a machine or device that incorporates pneumatic components, make sure that the system safety, such as pop-out prevention measures, is secured.

5 Observe warnings and cautions on the pages below to prevent accidents.

■The safety cautions are ranked as "DANGER", "WARNING" and "CAUTION" in this section.

DANGER:	When a dangerous situation may occur if handling is mistaken leading to fatal or serious injuries, or when there is a high degree of emergency to a warning.
WARNING:	When a dangerous situation may occur if handling is mistaken leading to fatal or serious injuries.
CAUTION:	When a dangerous situation may occur if handling is mistaken leading to minor injuries or physical damage.

Note that some items described as "CAUTION" may lead to serious results depending on the situation.
In any case, important information that must be observed is explained.

High purity chemical gas/liquid control systems

Safety Precautions

Always read before starting use

CAUTION Precautions in Export

Some of the products in this catalog are subject to Export Trade Control Ordinances and are indicated on each page. Be sure to observe laws and regulations when exporting these parts or devices containing these parts.

WARNING Design & Selection

1 Incorrect device selection and handling results in product problems and may cause problems in the user's system. The user is responsible for selecting and handling devices based on product specifications and compatibility with users' systems. Check selection and handling before use.

2 Working fluid
Check the compatibility of component materials, working fluid, and ambient atmosphere against the Compatibility checklist on Intro 11 before starting use. Check or consult with CKD before using fluids not listed on the checklist and when using new fluids, including different concentrations.The PYM and PMM Series cannot be used for corrosive fluids.The PMM10 Series cannot be used for solvents or alcohol.

3 Fluid temperature
Use fluid within the working fluid temperature range in specifications.

4 Fluid pressure range
Use fluid within the fluid pressure range in catalog specifications.

5 Ambient environment
①Confirm the compatibility of component materials and ambient environment before use.
②Check that fluids do not contact the product itself.
③Use the device within the working ambient temperature range.

6 Liquid ring
Provide a relief valve so that no liquid ring circuit is created.

7 Maintenance space
Secure sufficient space for maintenance and inspection.

8 The Rc screw is piped as explained in (1) For Rc screws. Leakage may occur from screwed-in sections because of the heat cycle. Under these conditions, select models with an integrated fitting.

WARNING Installation & Adjustment

1 Incorrect installation and piping cause product problems, may cause problems in users' systems, and may result in death or serious injury. The user is responsible for ensuring that operators read instruction manuals and fully understand precautions on safety, such as system and fluid features, and compatibility of fluids and devices.

Installation

1 Check for pipe leaks during installation, and confirm that the product is installed correctly.

Piping

1 Flush the inside of pipes before installing the valve. Dirt or foreign matter into fluids may prevent the valve from functioning correctly. If this could occur, install a filter on the primary side of the valve based on the circuit in use.

2 If the product has an arrow on it, connect pipes so that the fluid flows in the direction of the arrow.

3 Lay pipes so that tension, compression, and bending, etc., are not applied to the valve.

4 When using an NC or NO type, release the port on which operation pressure is not applied into the atmosphere. If direct suction or exhaust from the valve is not desired due to the ambient atmosphere or dust scattering, remove the set screw and connect a tube so that suction and exhaust are conducted where problems do not occur.

5 The solenoid valve connected to the actuator must be chosen according to specifications and applications.

Safety Precautions

Always read before starting use

CAUTION Installation & Adjustment

1 Refer to procedures on the right, and prepare the threading section. Refer to the latest instruction manual issued by the manufacturer of fittings and install fittings as instructed. Contact manufacturer of fittings for a dedicated installation jig which may be required for the installation . For AMG, GAMD, and GMMD, the distance between the adjacent fittings is short, so it may be difficult to connect the fitting with regular tools. The fitting manufacturer's dedicated installation jig may also be unusuable. Consult with CKD in this case. (Super 300 type pillar fitting, final lock fitting)

(1) For Rc screw

①Wind PTFE sealing tape three or four times around the joint complying with the JIS B 0203 piping taper screw.
②Tighten to the following tightening torque:

Port size	PFA fitting	PVC fitting
Rc1/8	0.5~0.8	————
Rc3/8	1.0~1.5	————
Rc1/2	1.5~2.0	2.0~2.5
Rc3/4	2.0~2.5	2.5~3.0
Rc1	2.5~3.5	3.0~4.0

(N·m)

(2) Operation port

Tighten at 0.4 to 0.6 N·m-Use a resin fitting for AMD3/4/5 *2, AMG3/4/502 or GAMD3/4/5 *2. To use a metal fitting with these models, use a reinforcing ring (refer to the page for each model).

2 Replace the product with one with the same model number. Note that even if they look the same, specifications may differ.

WARNING During use & Maintenance

1 Use the product within the maximum working pressure and range.

CAUTION During use

1 Check the compatibility of component materials, working fluid, and ambient atmosphere against the Compatibility checklist on Intro 11 before starting use. Check or consult with CKD before using fluids not listed on the checklist and when using new fluids, including different concentrations.

2 When using gas such as N_2 or air, valve seat leakage of up to 1 cm^3/min (at pneumatic pressure) could occur.

3 Valve seat leakage could occur if fluid temperature changes suddenly.

4 Use air or inert gas that has passed through a filter with 5 m or more filtration for operation air.

5 Handle the product carefully. It is precisely washed and delivered in a clean package assuming that it will be installed in a cleanroom.

6 Do not close flow adjustment and bypass adjustment valves too far.

7 With the AMD Series and flow adjuster and the MMD Series, turn the adjustment knob more than the specified number of times from the fully closed state. If not opened this far, the product could vibrate or flow fluctuate, etc., depending on working conditions. (Refer to pages 70 to 73.) Use the MMD**2 Series in fully closed or fully opened. This cannot be used at an intermediate position.

8 With the AMD and AMB Series, water hammering or vibration could occur depending on fluid pressure conditions. In most cases, this is removed by adjusting the open/close speed with a speed controller, etc. If the state is not improved, review fluid pressure and piping conditions.

9 With the PMM and PYM Series, vibration could occur due to conditions such as fluctuations in fluid pressure, flow or supply pressure, or piping, etc. Review conditions if vibration occurs.

⚠ CAUTION — During use

10 Do not use valves, etc., for stepping on or place heavy objects on them.

11 When use has been suspended for a long time, conduct trial operations before starting.

12 A turbulent flow occurs on the secondary side of the valve.If a device, such as a flow meter, requiring a laminar fluid flow is installed on the secondary side of the valve, provide sufficient distance so that the turbulent flow has no effect.

⚠ DANGER — Maintenance & inspection

1 Read the instruction manual thoroughly and fully understand contents before starting work.

2 Release operation air and fluid before starting maintenance.

3 Before replacing a valve, purge thoroughly with pure water or air so that residual chemicals do not adversely affect devices or personnel in the area.The top (cylinder side) of the diaphragm is not wetted area, but a chemical atmosphere occurs if gas permeates thin membranes. For safety, observe the following precautions in handling.

①A slight amount of permeated gas is discharged from the bleeder hole on the side of the cylinder when the valve operates, so check that no personnel approaches the bleeder hole during valve operation. Crystals may form on and around the bleeder hole.

②Wear corrosion-resistant gloves when handling valves. Do not touch valves with bare hands.

4 A chemical atmosphere may remain between the actuator and diaphragm of a valve used with chemicals. This valve must not be disassembled by the user.
Contact CKD or a designated dealer when disassembly is required.

5 Conduct the following inspections regularly once or twice a year to ensure that the valve operates optimally:

①Check for leaks outside the valve.

②Check for leaks from fittings.

High purity chemical gas/liquid control systems

Safety Precautions

Always read before starting use

Products and working fluid compatibility checklist

Check the product and working fluid compatibility with conditions for each type.
The product material is indicated as ○ (usable), △ (usable under set conditions), × (not usable).

Model No. / Fluid	AMDZ*, AMD0*, AMGZ0, AMG00, AMS, AMDS, TQAS, TMDZ/0	AMD0/3/4/5*2, MMD3/4/502, AMG3/4/502, GAMD3/4/5*2, GMMD3/4/502	
DI water			
Sulfuric acid	Select an all-resin actuator. (Some models require special ordering.)		
Hydrochloric acid		Select option "C." (Excluding AMD0*2.)	
Nitric acid		Select option "P."	
Hydrofluoric acid		Select option "P." (Excluding AMD0*2.)	
Phosphoric acid			
Ammonium fluoride		Select option "P." (Excluding AMD0*2.)	
Hydrogen peroxide			
Ozone water	Consult with CKD.	Consult with CKD.	
Sulfuric acid + hydrogen peroxide	If the fluid temperature is 100 C or more, select a PTFE type body (special order product). Select an all-resin actuator (special order product).	If the fluid temperature is 100 C or more, select a PTFE type body (special order product).	
Sulfuric acid + ozone			
Sodium hydroxide			
Potassium hydroxide			
Aqueous ammonia	Select ammonia specifications (special order product).	Select option "M."	
Amine-based peeling agent	If the fluid temperature is 80 C or more, the product should be replaced at least once a year. When using metal piping, select a SUS body models. (Some models require special ordering.)		
Acetone	When using metal piping, select SUS body models. (Some models require special ordering.) Consult with CKD when using TMDZ/O.	When using metal piping, select SUS body model. (Some models require special ordering.) When using fluorine resin piping, select option "M." Provide measures to prevent ignition from electrostatic discharge.	
Butyl acetate			
Isopropyl alcohol			
Thinner			
Developer			
Air	When using gas, valve seat leakage of up to 1 cm^3/min at (pneumatic pressure) could occur.		
N_2 gas			

- Select the standard type for blank fields.
- The fluid temperature is compatible at 90 C or less.
- Consult with CKD when using other fluids.
- Check that fluids do not contact the product.

	AMD2/3/4/5*, MMD2/3/4*, TMD3	AMB	Body	
			PFA·PTFE	SUS
			○	○
	Select option "Y" for high temperature.	Select option "P" when the fluid temperature is between 5 and 60 C. Select option "F" when the fluid temperature is between 5 and 90 C.	○	×
			○	×
	Select option "K" for high temperature.		○	×
			○	×
			○	×
			○	×
			○	×
	Consult with CKD.	Consult with CKD.	○	×
If the fluid temperature is 100 C or more, select a PTFE type body (special order product).			△	×
			△	×
			○	○
			○	○
	Select option "M" for AMD.	Select AMD ammonia specifications.	○	△
		Select AMD.	○	○
	Select an aluminum actuator (special order product). When using metal piping, select SUS body model(special order product).	Select option "S" or "E."	△	○
			△	○
			△	○
			△	○
			○	○
		When using gas, valve seat leakage of up to 5 cm^3/min at (pneumatic pressure) could occur.	○	○
			○	○

○: Usable △: Usable under set conditions ×: Not usable

Overview

This compact high-performance air-operated valve for chemical liquids is available in port sizes from 1/8 inch to 1 inch for use in semiconductor manufacturing equipment.

Features

- Compatible with fluid temperatures up to 160 ˚C
  The standard-specification valve controls fluids up to 90 ˚C.
  (AMD**2, AMG**2, GAMD**2 Series)

- Assorted fitting variations

- PFA molded body with integrated fitting
  The special resin body eliminates causes of particle formation.

- Selectable operation port position
  The operation port position is selectable from four directions.
  (AMD**2 Series)

- Improved corrosion resistance

- No harmful polyvinyl chlorides
  No harmful polyvinyl chlorides generating toxic chlorine-based gases are used in actuator material.
  (AMDZ/0, AMD**2, AMGZ/0, AMG*02, GAMD**2 Series)

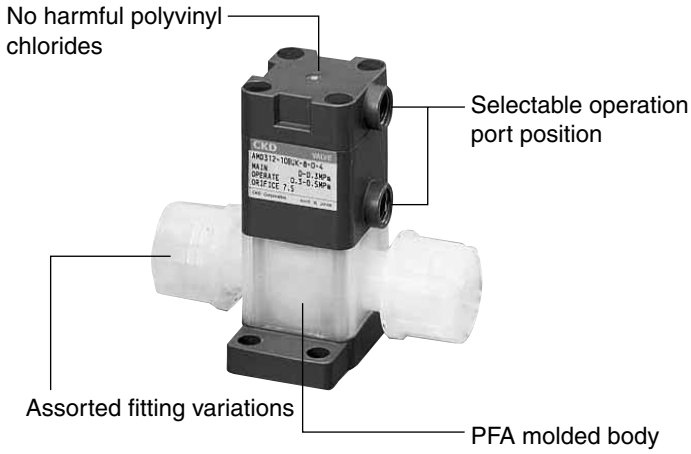

⚠ Precautions	Intro 7
2 port valve	
AMDZ/AMD0 PFA body	2
AMD0*2 PFA body	6
AMD3*2 PFA body	10
AMD3*2 stainless steel body	16
AMD4*2 PFA body	20
AMD4*2 stainless steel body	24
AMD5*2 PFA body	28
AMD5*2 stainless steel body	32
Sister product AMD2/3/4/5*	58
Bellows valve AMB	66
3 port valve	
AMGZ/AMG00 PFA body	36
AMG*02 PTFE body	40
Manifold	
GAMD**2 PTFE body	48
Custom order	
High-pressure specifications 2, 3 port valve and manifold	56
Flow characteristics	70
■ Electric catalog file list	156

Air-operated valve for chemical liquids

AMDZ$^{1}_{2}_{3}$ / AMD0$^{1}_{2}_{3}$ Series

This compact high-performance valve greatly reduces causes of particle formation with its PFA molded body.

● Orifice: Ø1.6 to Ø4

Specifications

Descriptions		AMDZ*-*-2	AMD0*-*-4
Working fluid		Chemical liquids, pure water, N_2 gas, air	
Fluid temperature ˚C		5 to 80	
Withstanding pressure MPa		1	
Working pressure range (A → B) MPa		0 to 0.5	
Working pressure range (B → A) MPa		0 to 0.3	
Valve seat leakage cm^3/min		0 (at, water pressure)	
Back pressure MPa		0 to 0.3	
Ambient temperature ˚C		0 to 60	
Frequency		30 times/min or less	
Installation attitude		Free	
Connection		Rc1/8 OD Ø3 tube connection OD 1/8" tube connection	Rc1/8 OD Ø6 tube connection OD 1/4" tube connection
Orifice		Ø2	Ø4
Cv value		0.08 (Note 1, 2)	0.32 (Note 2)
Operation section	Operation pressure MPa	NC/NO 0.3 to 0.5, double acting 0.2 to 0.3	
	Operation port	M5	

Note 1: The Cv for the PFA body connection Rc 1/8 is 0.12.
Note 2: The Cv of the SUS body is 80% of the Cv for the PFA body connection Rc 1/8.
Note 3: Check the compatibility of the product's configuration materials, working fluid, and ambient atmosphere before use.
Note 4: See page 6 for using this value for acidic fluids.
Note 5: See pages 72 and 73 for flow characteristics.

Internal structure and parts list

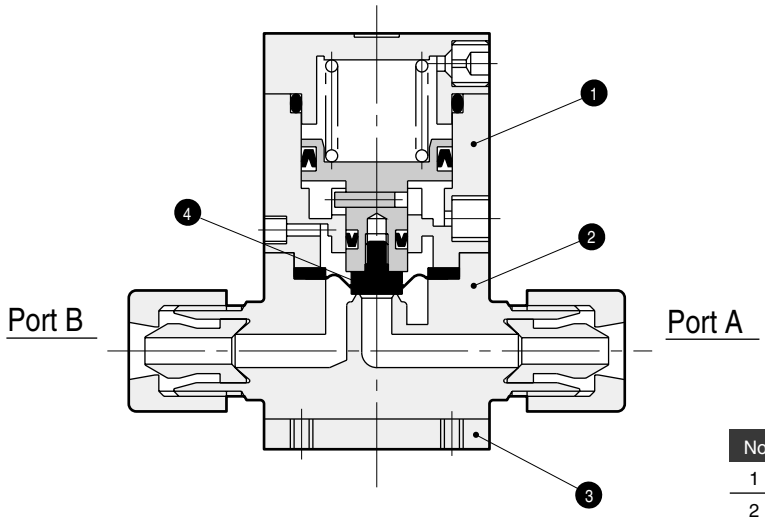

No.	Parts name	Material	Quantity
1	Actuator assembly	PPS	1
2	Body	PFA	1
3	Mounting plate	SUS	1
4	Diaphragm	PTFE	1

The material differs with the model. Contact CKD for details.

 ⚠ Read the precautions on pages 7 to 12 in the introduction before use.

How to order

● AMDZ Series

AMDZ (1) - (6) - 2 - ( ) (D)

- Model No.
- Ⓐ Actuation
- Ⓑ Connection
- Ⓒ Orifice
- Ⓓ Option
- Ⓔ Body material

Symbol	Description	Ⓑ Connection 6	3US	6BUS	3UF	3UR	6BUR
		Rc 1/8	Super type Pillar fitting integrated type		F-LOCK 20 series fitting integrated type	F-LOCK 60 series fitting integrated type	
			Ø3 X Ø2 tube connection	1/8" X 0.086" tube connection	Ø3 X Ø2 tube connection	Ø3 X Ø2 tube connection	1/8" X 1/16" tube connection
Ⓐ Actuation							
1	NC (normally closed)	●	●	●	●	●	●
2	NO (normally open)	●	●	●	●	●	●
3	Double acting	●	●	●	●	●	●
Ⓒ Orifice							
2	Refer to the right	Ø2	Ø2	Ø2	Ø2	Ø1.6	Ø1.6
Ⓓ Option							
Blank	ON/OFF only	●	●	●	●	●	●
1	With flow adjustment (Only NC type)	●	●	●	●	●	●
Ⓔ Body material							
Blank	PFA molded body or PTFE machined body	PFA	PFA		PTFE	PTFE	
D	Stainless steel body	●					

● AMD0 Series

AMD0 (1) - (8BUW) - 4 - (1) ( )

- Model No.
- Ⓐ Actuation
- Ⓑ Connection
- Ⓒ Orifice
- Ⓓ Option
- Ⓔ Body material

Symbol	Description	Ⓑ Connection 6	6US	8BUS	6UJ	8BUJ	6UP	8BUP	6UF	8BUF	6UR	8BUR	6UK	8BUK	8BUW
		Rc 1/8	Super type Pillar fitting integrated type		Super 300 type Pillar fitting J series integrated type		Super 300 type Pillar fitting P series integrated type		F-LOCK 20 series fitting integrated type		F-LOCK 60 series fitting integrated type		Final lock fitting integrated type		FLARTEC fitting integrated type
			Ø6 X Ø4 tube connection	1/4" X 5/32" tube connection	Ø6 X Ø4 tube connection	1/4" X 5/32" tube connection	Ø6 X Ø4 tube connection	1/4" X 5/32" tube connection	Ø6 X Ø4 tube connection	Ø6.35 X Ø4.3 tube connection	Ø6 X Ø4 tube connection	1/4" X 5/32" tube connection	Ø6 X Ø4 tube connection	1/4" X 5/32" tube connection	1/4" X 5/32" tube connection
Ⓐ Actuation															
1	NC (normally closed)	●	●	●	●	●	●	●	●	●	●	●	●	●	●
2	NO (normally open)	●	●	●	●	●	●	●	●	●	●	●	●	●	●
3	Double acting	●	●	●	●	●	●	●	●	●	●	●	●	●	●
Ⓒ Orifice															
4	Refer to the right	Ø4	Ø4	Ø4	Ø4	Ø4	Ø4	Ø4	Ø4	Ø4	Ø3.5	Ø3.5	Ø4	Ø4	Ø3
Ⓓ Option															
Blank	ON/OFF only	●	●	●	●	●	●	●	●	●	●	●	●	●	●
1	With flow adjustment	●	●	●	●	●	●	●	●	●	●	●	●	●	●
Ⓔ Body material															
Blank	PFA molded body or PTFE machined body	PFA	PFA		PFA		PFA		PFA		PFA		PFA		PTFE
D	Stainless steel body	●													

⚠ Note on model No. selection

Note 1: See page 6 when selecting an all-resin actuator used with acidic fluids.
Note 2: The actuator soft-shut (diaphragm) model also available reduces foaming and improves drip prevention. Contact CKD for details.

Dimensions

● Rc screw type

·AMDZ*-6-2

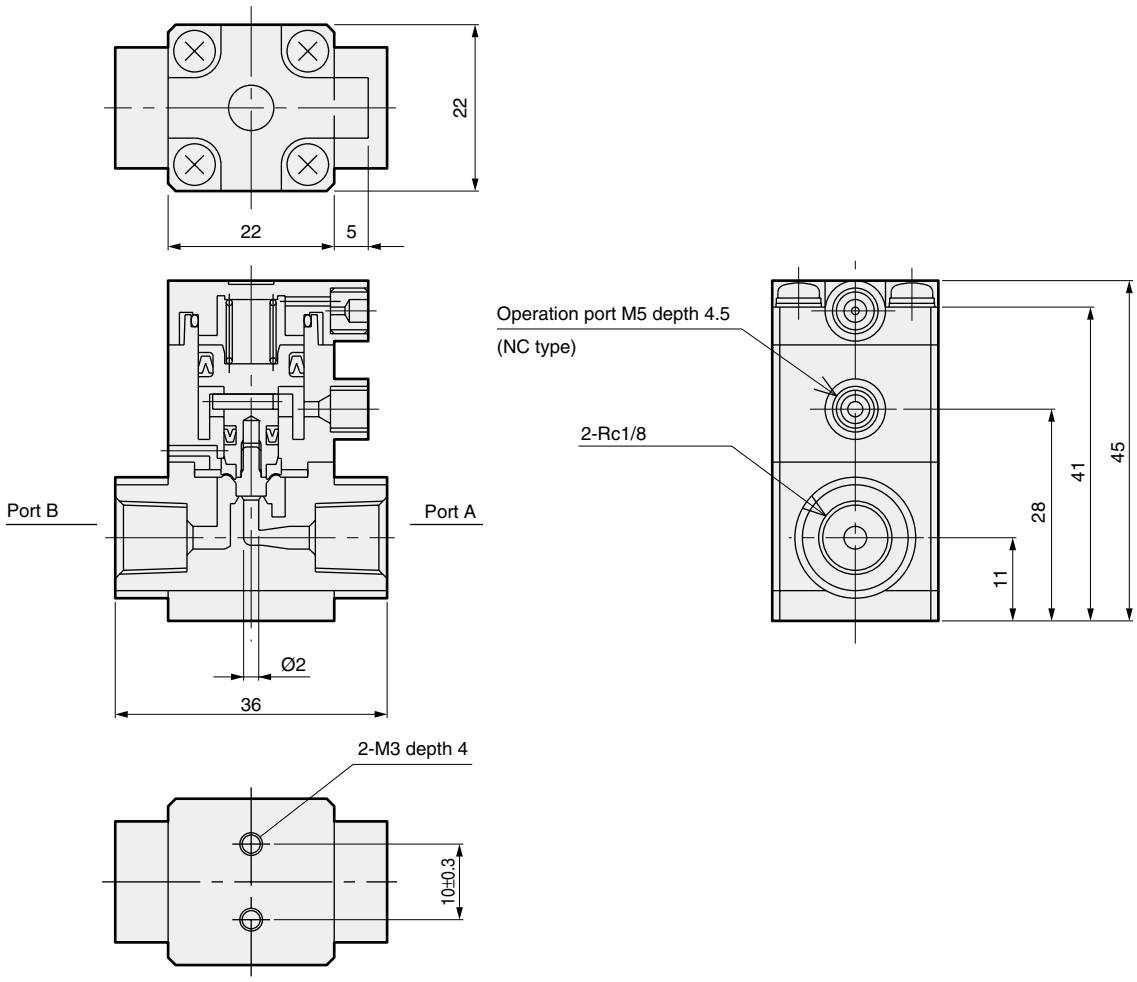

● Fitting integrated type

·AMDZ*-[*1]-2

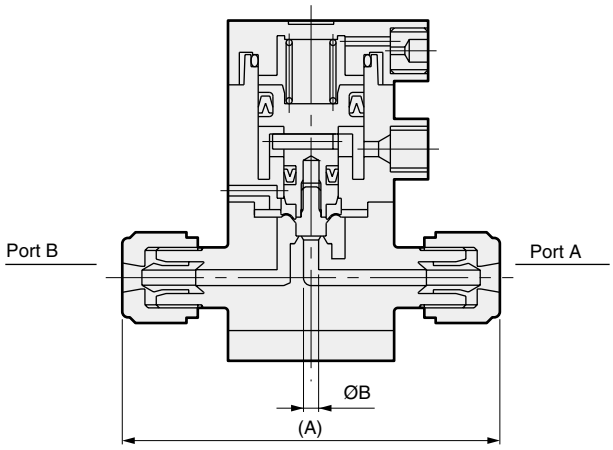

● With flow adjustment

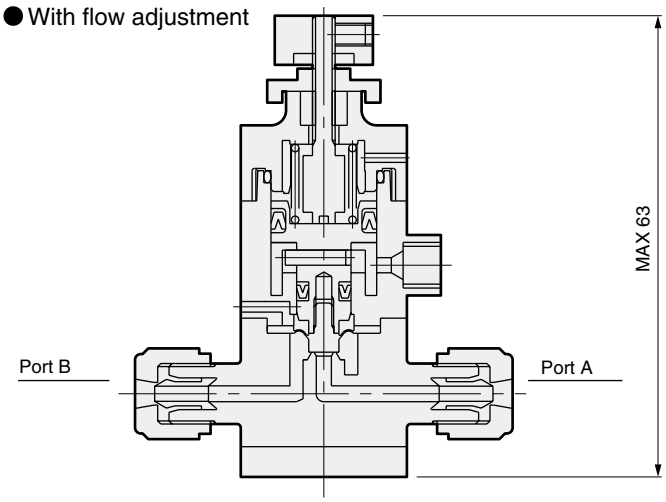

Dimension / [*1] (Connection model No.)	A	B
3US	50	2
6BUS	50	2
3UF	40	2
3UR	57	1.6
6BUR	57	1.6

Dimensions

● Rc screw type

·AMD0*-6-4

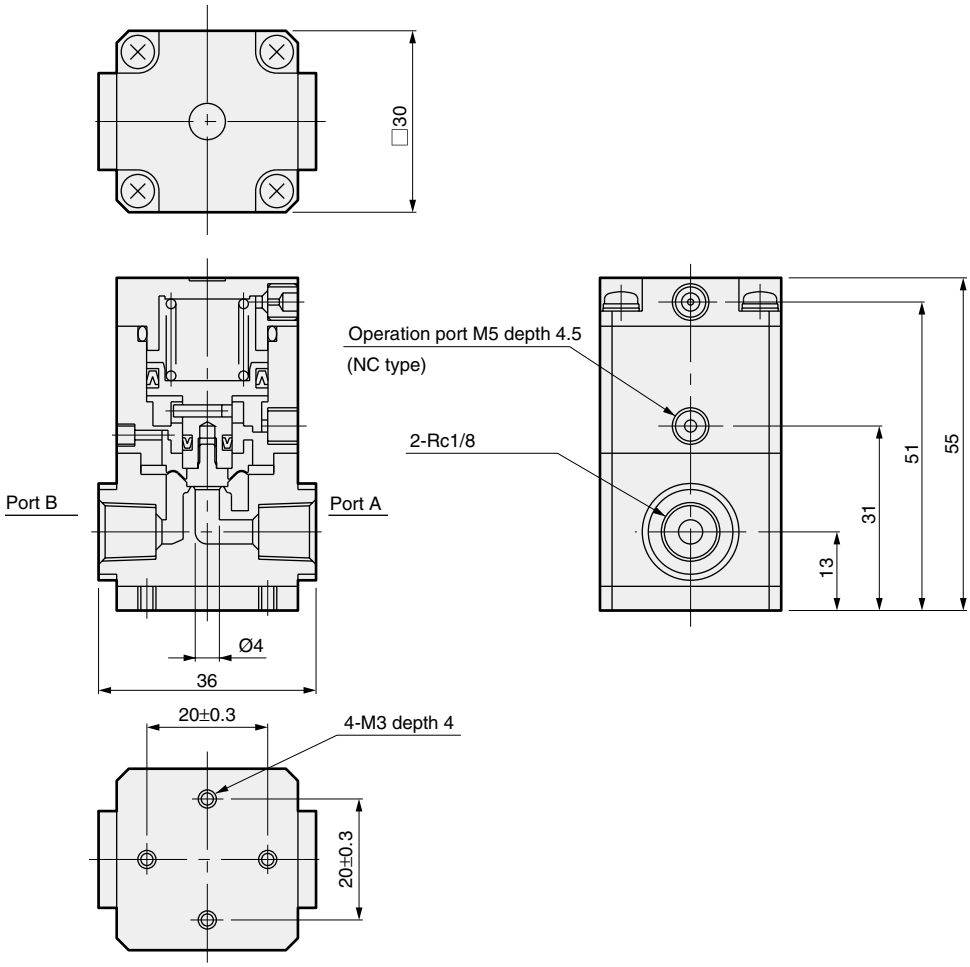

● Fitting integrated type

·AMD0*-*1-4

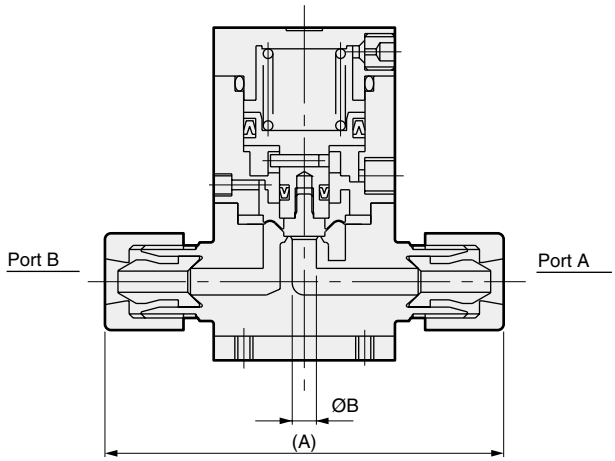

● With flow adjustment

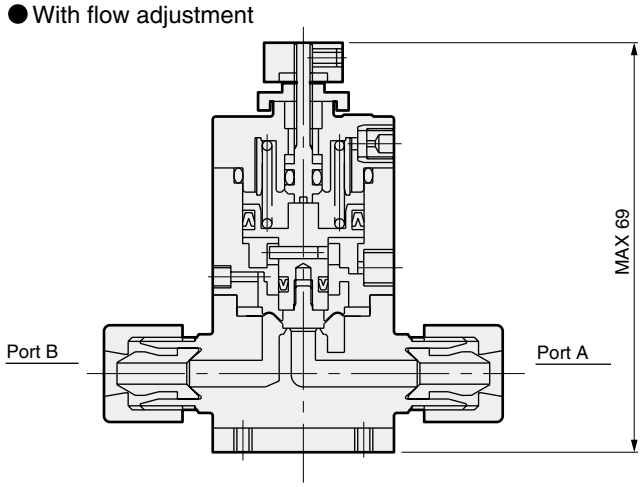

Dimension / *1 (Connection model No.)	A	B
6US	66	4
8BUS	66	4
6UJ	64	4
8BUJ	64	4
6UP	68	4
8BUP	68	4

Dimension / *1 (Connection model No.)	A	B
6UF	64	4
8BUF	64	4
6UR	90	3.5
8BUR	92	3.5
6UK	71	4
8BUK	71	4
8BUW	86	3

Air-operated valve for chemical liquids

AMD0$^{1}_{2}_{3}$2 Series

Special PPS enables standard types to be used with hydrofluoric acids.

● Orifice: Ø3 to Ø4

Specifications

Descriptions		AMD0$^{1}_{2}_{3}$2-*-4	
Working fluid		Pure water, chemical liquids, air, N_2 gas	
Fluid temperature ˚C		5 to 100 (Note 1)	
Withstanding pressure MPa		1	
Working pressure range (A → B) MPa		0 to 0.5	
Working pressure range (B → A) MPa		0 to 0.3	
Valve seat leakage cm³/min		0 (at, water pressure)	
Back pressure MPa		0 to 0.3	
Ambient temperature ˚C		0 to 60	
Frequency		30 times/min or less	
Installation attitude		Free	
Connection		Rc1/8, ODØ6 tube connection (fitting integrated type), OD 1/4" tube connection (fitting integrated type)	
Orifice		Ø3.5	Ø4
Cv value		0.28	0.32
Operation section	Operation pressure range MPa	NC/NO 0.35 to 0.5, double acting 0.3 to 0.4 (0.2 to 0.3 for fluid symbol "P")	
	Operation pressure connection port	Rc1/8	

Note 1: 5 to 40 ˚C for hydrofluoric acids.

Internal structure and parts list

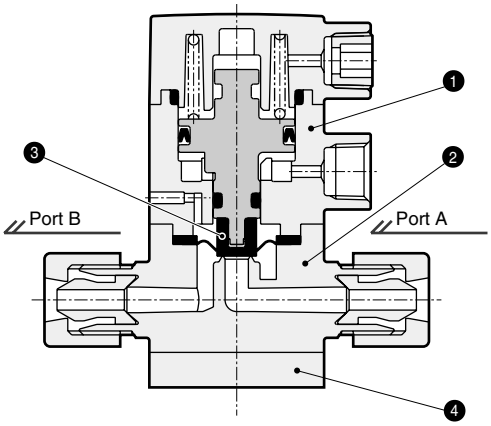

No.	Parts name	Material
1	Actuator	PPS
2	Body	PFA
3	Diaphragm	PTFE
4	Mounting plate	PPS

The material differs with the model.
Contact CKD for details.

 ⚠Read the precautions on pages 7 to 12 in the introduction before use.

How to order

AMD0 (1) 2 - (6US) - 4 - (1) - (4) (M)

- Model No.
- Ⓐ Actuation
- Ⓑ Connection
- Orifice
- Ⓒ Option
- Ⓓ Operation port direction
- Ⓔ Fluid

Ⓐ Actuation	
1	NC (normally closed)
2	NO (normally open)
3	Double acting

Ⓑ Connection														
6	6US	8BUS	6UJ	8BUJ	6UP	8BUP	6UF	8BUF	6UR	8BUR	6UK	8BUK	8BUW
Rc screw integrated type	Super type Pillar fitting integrated type		Super 300 type Pillar fitting J series integrated type		Super 300 type Pillar fitting P series integrated type		F-LOCK 20 series fitting integrated type		F-LOCK 60 series fitting integrated type		Final lock fitting integrated type		FLARTEC fitting integrated type
Rc1/8	Ø6 X Ø4 tube connection	1/4" X 5/32" tube connection	Ø6 X Ø4 tube connection	1/4" X 5/32" tube connection	Ø6 X Ø4 tube connection	1/4" X 5/32" tube connection	Ø6 X Ø4 tube connection	Ø6.35 X Ø4.3 tube connection	Ø6 X Ø4 tube connection	1/4" X 5/32" tube connection	Ø6 X Ø4 tube connection	1/4" X 5/32" tube connection	1/4" X 5/32" tube connection
Orifice	Ø4	Ø4	Ø4		Ø4		Ø4		Ø3.5		Ø4		Ø3
Body material	PFA: PFA molded body, PTFE: PTFE machined body												
	PFA	PFA	PFA		PFA		PFA		PFA		PFA		PTFE

Symbol	Descriptions	6	6US	8BUS	6UJ	8BUJ	6UP	8BUP	6UF	8BUF	6UR	8BUR	6UK	8BUK	8BUW
Ⓒ Option															
0	ON/OFF only	PFA	PFA		PFA		PFA		PFA		PFA		PFA		PTFE
1	With flow adjustment	PFA	PFA		PFA		PFA		PFA		PFA		PFA		PTFE
6	ON/OFF, with indicator	PFA	PFA		PFA		PFA		PFA		PFA		PFA		PTFE
Ⓓ Operation port direction															
4		●	●	●	●	●	●	●	●	●	●	●	●	●	●
1		●	●	●	●	●	●	●	●	●	●	●	●	●	●
2		●	●	●	●	●	●	●	●	●	●	●	●	●	●
3		●	●	●	●	●	●	●	●	●	●	●	●	●	●
Ⓔ Fluid symbol															
Blank	Standard	●	●	●	●	●	●	●	●	●	●	●	●	●	●
M	For ammonia	●	●	●	●	●	●	●	●	●	●	●	●	●	●
P	For nitric acid	●	●	●	●	●	●	●	●	●	●	●	●	●	●

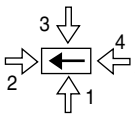

Indicates that fluid flows in direction of the black arrow when looking at valve from above. The white arrow indicates operation port direction.

● Bottom installation type No.

(Orifice indication and hyphen (-) between Ⓒ and Ⓓ are not required.)

AMD0 (A) 2 - (B) - (C) (D) (E) X

- Bottom installation

Dimensions

● Fluid symbol [Blank]

·AMD0$^{1}_{2}_{3}$2-[*1]-4-0-□

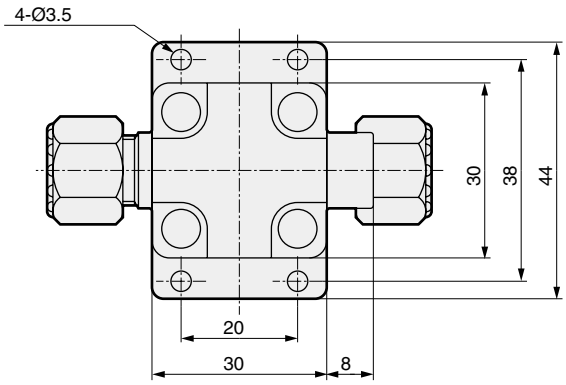

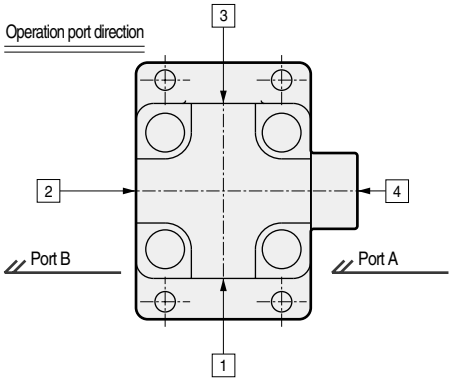

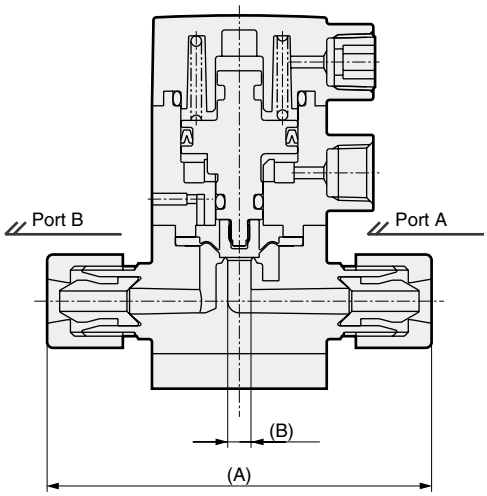

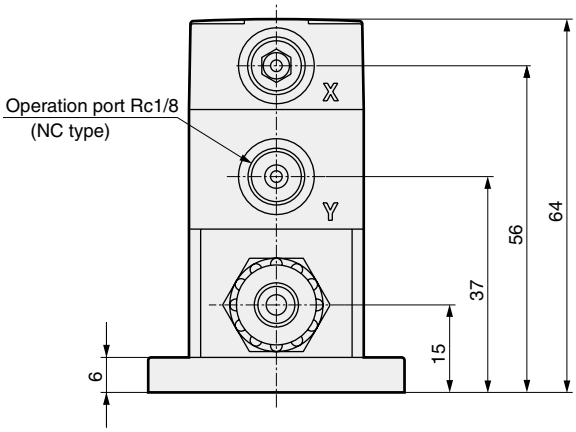

[*1] Connection model No.	A dimension	B dimension
6	36	4
6US	66	4
8BUS	66	4
6UJ	64	4
8BUJ	64	4
6UP	68	4
8BUP	68	4

[*1] Connection model No.	A dimension	B dimension
6UF	64	4
8BUF	64	4
6UR	90	3.5
8BUR	92	3.5
6UK	71	4
8BUK	71	4
8BUW	86	3

Dimensions

● Bottom installation type

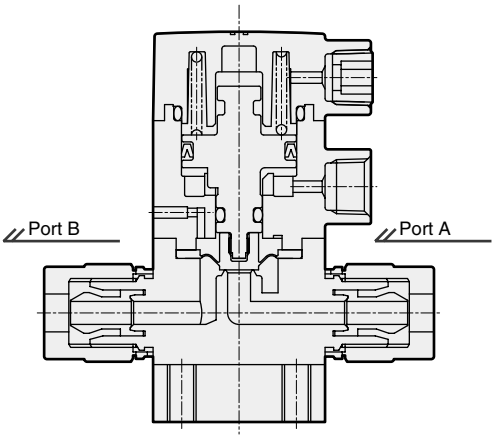

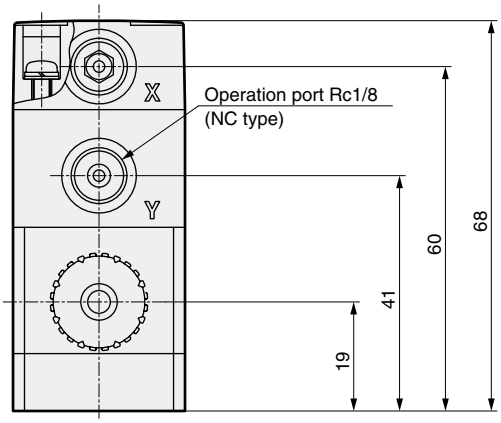

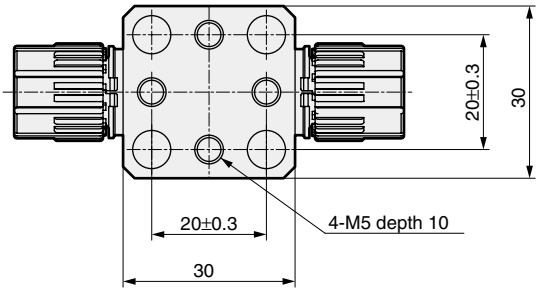

● With flow adjustment

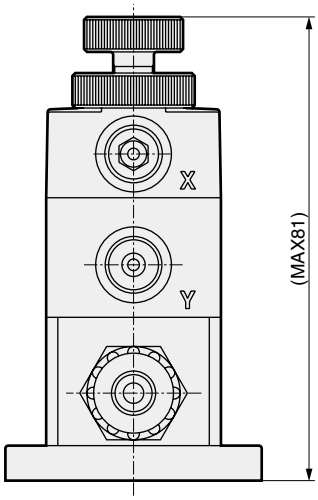

● With indicator

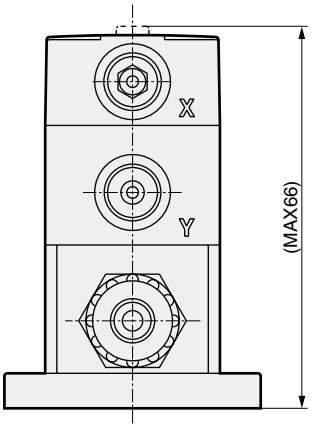

Air-operated valve for chemical liquids

AMD3$^{1}_{2}_{3}$2 Series

● Orifice: Ø6.3 to Ø10

CAD

Specifications

Descriptions		AMD3$^{1}_{2}_{3}$2-*-8				AMD3$^{1}_{2}_{3}$2-*-10		
Working fluid		Chemical liquids, pure water (Note 1)						
Fluid temperature ˚C		5 to 90 (5 to 160) (Note 5)						
Withstanding pressure MPa		0.9						
Working pressure range (A → B) MPa		0 to 0.3 (Note 3)						
Working pressure range (B → A) MPa		0 to 0.1 (Note 3)						
Valve seat leakage cm³/min		0 (at, water pressure)						
Back pressure MPa		0 to 0.1 (Note 3)						
Ambient temperature ˚C		0 to 60						
Frequency		30 times/min or less						
Installation attitude		Free						
Connection		ODØ10 tube connection (fitting integrated type) OD3/8" tube connection (fitting integrated type)				ODØ12 tube connection (fitting integrated type) OD1/2" tube connection (fitting integrated type)		
Orifice		Ø6.3	Ø6.4	Ø7.5	Ø8	Ø9.4	Ø9.5	Ø10
Cv value		0.8		1.25		1.8		
Bypass orifice (when bypass is installed)		Ø2.3						
Operation section	Operation pressure range MPa	NC 0.3 to 0.5, NO 0.3 to 0.5 (0.3 to 0.35 for high temperature use), double acting 0.3 to 0.4 (0.2 to 0.25 for high temperature use)						
	Operation pressure connection port	Rc1/8 (Note 2)						

Note 1: Check compatibility of the product's configuration materials working fluid, and ambient atmosphere before use.
Note 2: Connect a resin fitting when connecting to the operation port.
(When using a metal fitting, select one with a reinforcement ring.)
Note 3: See page 56 for high-pressure specifications.
Note 4: See pages 70 and 71 for flow characteristics.
Note 5: 5 to 40 ˚C for hydrofluoric acids.

 ⚠ Read the precautions on pages 7 to 12 in the introduction before use.

Internal structure and parts list

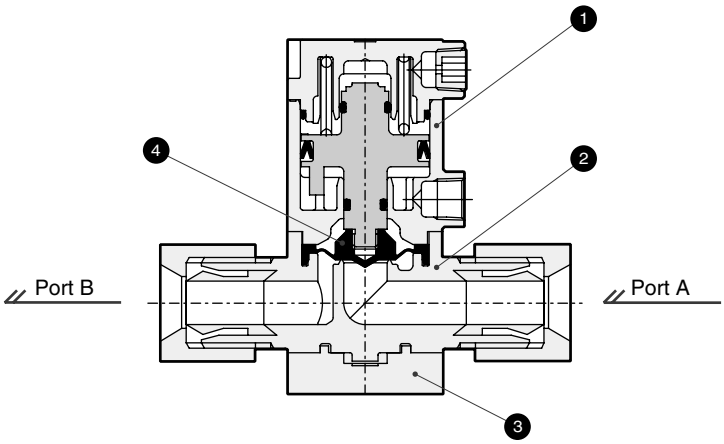

No.	Parts name	Material	Quantity
1	Actuator assembly	PPS	1
2	Body	PFA	1
3	Mounting plate	PPS	1
4	Diaphragm	PTFE	1

The material differs with the model. Contact CKD for details.

How to order

● AMD3*2 Series (connection: Ø10, 3/8" tube)

AMD3 (1) 2 - (10UA) - 8 - (1) - (4) (Y)

- Model No.
- Ⓑ Connection
- Orifice
- Ⓒ Option
- Ⓓ Operation port direction
- Ⓔ Fluid

Ⓐ Actuation	
1	NC (normally closed)
2	NO (normally open)
3	Double acting

Ⓑ Connection	10US	10BUS	10UJ	10BUJ	10UP	10BUP	10UA	10BUA	10UR	10BUR	10UK	10BUK	10BUW
	Super type Pillar fitting integrated type		Super 300 type Pillar fitting J series integrated type		Super 300 type Pillar fitting P series integrated type		F-LOCK 20A series fitting integrated type		F-LOCK 60 series fitting integrated type		Final lock fitting integrated type		FLARTEC fitting integrated type
	Ø10 X Ø8 tube connection	3/8" X 1/4" tube connection	Ø10 X Ø8 tube connection	3/8" X 1/4" tube connection	Ø10 X Ø8 tube connection	3/8" X 1/4" tube connection	Ø10 X Ø8 tube connection	3/8" X 1/4" tube connection	Ø10 X Ø8 tube connection	3/8" X 1/4" tube connection	Ø10 X Ø8 tube connection	3/8" X 1/4" tube connection	3/8" X 1/4" tube connection
Symbol / Descriptions — Orifice	Ø8		Ø8		Ø8		Ø8		Ø7.5	Ø6.4	Ø7.5		Ø6.3
Ⓒ Option	Body material												
	PFA: PFA molded body, PTFE: PTFE machined body												
0 ON/OFF only	PFA		PFA		PFA		PFA		PFA		PFA		PTFE
1 With flow adjustment													
2 With bypass	PTFE		PTFE		PTFE		PTFE		PTFE		PTFE		
3 With flow adjustment and bypass													
6 ON/OFF, with indicator	PFA		PFA		PFA		PFA		PFA		PFA		
7 With bypass/with indicator	PTFE		PTFE		PTFE		PTFE		PTFE		PTFE		
Ⓓ Operation port direction													
4	●	●	●	●	●	●	●	●	●	●	● (Note 1)	● (Note 1)	●
1	●	●	●	●	●	●	●	●	●	●	●	●	●
2	●	●	●	●	●	●	●	●	●	●	● (Note 1)	● (Note 1)	●
3	●	●	●	●	●	●	●	●	●	●	●	●	●
Ⓔ Fluid													
Blank Standard	●	●	●	●	●	●	●	●	●	●	●	●	●
M For ammonia	●	●	●	●	●	●	●	●	●	●	●	●	●
P For nitric acid, for hydrofluoric acid (Note 3)	●	●	●	●	●	●	●	●	●	●	●	●	●
Y For high temperature (5 to 160˚C) (Note 2)	●	●	●	●	●	●	●	●			●	●	
E For high temperature (5 to 160˚C), PTFE machined body (Note 2)	●	●	●	●	●	●	●	●			●	●	

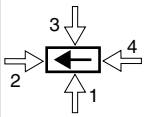

*Indicates that fluid flows in direction of the black arrow when looking at valve from above. The white arrow indicates operation port direction.

● Model No. for type with coated metal section
(Orifice indication and hyphen (-) between Ⓒ and Ⓓ are not required.)

AMD3 (A) 2 - (B) - (C)(D)(E) C

- Coated

● Model No. for type with operation port reinforcement ring
(Hyphen (-) between Ⓒ and Ⓓ is not required.)

AMD3 (A) 2 - (B) - 8 - (C)(D)(E) R

- Orifice
- With reinforcement ring

● Bottom installation type No.
(Orifice indication and hyphen (-) between Ⓒ and Ⓓ are not required.)

AMD3 (A) 2 - (B) - (C)(D)(E) X

- Bottom installation

● Model No. for type with coated metal section + operation port reinforcement ring + bottom installation
(Orifice indication and hyphen (-) between Ⓒ and Ⓓ are not required.)

AMD3 (A) 2 - (B) - (C)(D)(E) C R X

- Coated
- With reinforcement ring
- Bottom installation

⚠ Note on model No. selection

Note 1: The final lock fitting nut and operation air piping could interfere, so check dimensions before selecting.

Note 2: The following Ⓒ options are not available: 2 (with bypass), 3 (with flow adjustment, bypass), 7 (with bypass/with indicator). This valve is not compatible with nitric acid, hydrofluoric acid, or chlorine.

Note 3: C (with coated metal section) is included in the Ⓔ Fluid P item.

● AMD3*2 Series (connection: Ø12, 1/2" tube)

AMD3 (1) 2 - (12UJ) - 10 - (1) - (4) (M)

- 1: Model No.
- 12UJ: Ⓑ Connection
- 10: Orifice
- 1: Ⓒ Option
- 4: Ⓓ Operation port direction
- M: Ⓔ Fluid

Ⓐ Actuation	
1	NC (normally closed)
2	NO (normally open)
3	Double acting

Ⓑ Connection	12US	15BUS	12UJ	15BUJ	12UP	15BUP	12UA	15BUA	12UR	15BUR	12UK	15BUK	15BUW
	Super type Pillar fitting integrated type		Super 300 type Pillar fitting J series integrated type		Super 300 type Pillar fitting P series integrated type		F-LOCK 20A series fitting integrated type		F-LOCK 60 series fitting integrated type		Final lock, fitting integrated type		FLARTEC fitting integrated type
	Ø12 X Ø10 tube connection	1/2" X 3/8" tube connection	Ø12 X Ø10 tube connection	1/2" X 3/8" tube connection	Ø12 X Ø10 tube connection	1/2" X 3/8" tube connection	Ø12 X Ø10 tube connection	1/2" X 3/8" tube connection	Ø12 X Ø10 tube connection	1/2" X 3/8" tube connection	Ø12 X Ø10 tube connection	1/2" X 3/8" tube connection	1/2" X 3/8" tube connection
Symbol / Descriptions \ Orifice	Ø10		Ø10		Ø10		Ø10		Ø9.5		Ø10		Ø9.4
Ⓒ Option (Note 1)	Body material												
	PFA: PFA molded body, PTFE: PTFE machined body												
0 ON/OFF only	PFA		PFA		PFA		PFA		PFA		PFA		PFA
1 With flow adjustment													
2 With bypass	PFA		PFA		PFA		PTFE	PFA	PTFE		PFA		PTFE
3 With flow adjustment and bypass													
6 ON/OFF, with indicator	PFA		PFA		PFA		PFA		PFA		PFA		PFA
7 With bypass/with indicator			PFA		PFA		PTFE	PFA	PTFE				PTFE
Ⓓ Operation port direction													
4	●	●	●	●	●	●	●	●	●	●	●	●(Note 1)	●
1	●	●	●	●	●	●	●	●	●	●	●	●	●
2	●	●	●	●	●	●	●	●	●	●	●	●(Note 1)	●
3	●	●	●	●	●	●	●	●	●	●	●	●	●
Ⓔ Fluid													
Blank Standard	●	●	●	●	●	●	●	●	●	●	●	●	●
M For ammonia	●	●	●	●	●	●	●	●	●	●	●	●	●
P For nitric acid, for hydrofluoric acid (Note 3)	●	●	●	●	●	●	●	●	●	●	●	●	●
Y For high temperature (5 to 160°C) (Note 2)	●	●	●	●	●	●	●	●			●	●	
E For high temperature (5 to 160°C), PTFE machined body (Note 2)	●	●	●	●	●	●	●	●			●	●	

Indicates that fluid flows in direction of the black arrow when looking at valve from above. The white arrow indicates operation port direction.

● Model No. for type with coated metal section
(Orifice indication and hyphen (-) between Ⓒ and Ⓓ are not required.)

AMD3 (A) 2 - (B) - (C)(D)(E) C

- C: Coated

● Model No. for type with operation port reinforcement ring
(Hyphen (-) between Ⓒ and Ⓓ is not required.)

AMD3 (A) 2 - (B) - 10 - (C)(D)(E) R

- 10: Orifice
- R: With reinforcement ring

● Bottom installation type No.
(Orifice indication and hyphen (-) between Ⓒ and Ⓓ are not required.)

AMD3 (A) 2 - (B) - (C)(D)(E) X

- X: Bottom installation

● Model No. for type with coated metal section + operation port reinforcement ring + bottom installation
(Orifice indication and hyphen (-) between Ⓒ and Ⓓ are not required.)

AMD3 (A) 2 - (B) - (C)(D)(E) C R X

- C: Coated
- R: With reinforcement ring
- X: Bottom installation

⚠ Note on model No. selection

Note 1: The final lock fitting nut and operation air piping could interfere, so check dimensions before selecting.

Note 2: The following Ⓒ options are not available: 2 (with bypass), 3 (with flow adjustment, bypass), 7 (with bypass/with indicator). This valve is not compatible with nitric acid, hydrofluoric acid, or chlorine.

Note 3: C (with coated metal section) is included in the Ⓔ Fluid P item.

Dimensions

● Standard type

·AMD3$^{1}_{2}{}^{2}_{3}$2-[*1]-8

·AMD3$^{1}_{2}{}^{2}_{3}$2-[*1]-10

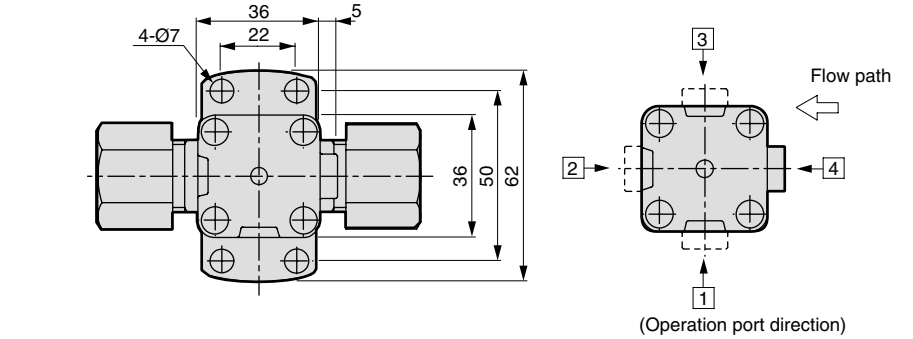

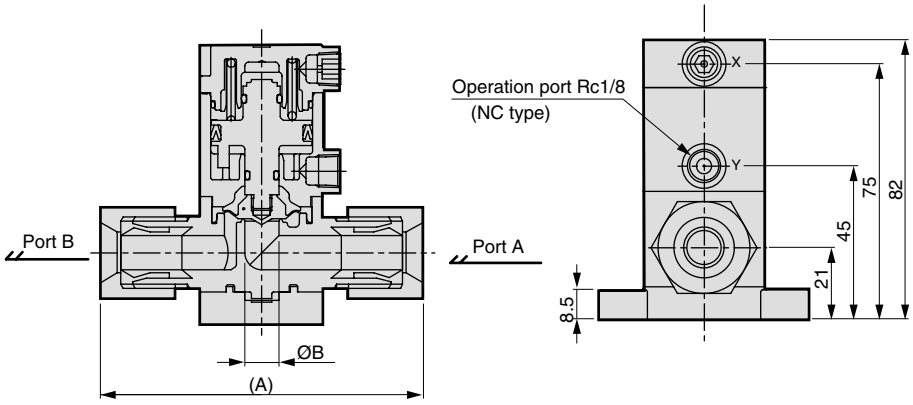

AMD3 (10mm)

[*1] (Connection model No.)	A	B
10US	86	8
10BUS	86	8
10UJ	82	8
10BUJ	82	8
10UP	86	8
10BUP	86	8
10UA	78	8
10BUA	78	8
10UR	110	7.5
10BUR	114	6.4
10UK	96	7.5
10BUK	96	7.5
10BUW	101	6.3

AMD3 (12mm)

[*1] (Connection model No.)	A	B
12US	95	10
15BUS	95	10
12UJ	90	10
15BUJ	90	10
12UP	94	10
15BUP	94	10
12UA	86	10
15BUA	86	10
12UR	110	9.5
15BUR	114	9.5
12UK	102	10
15BUK	102	10
15BUW	103	9.4

● Bottom installation type

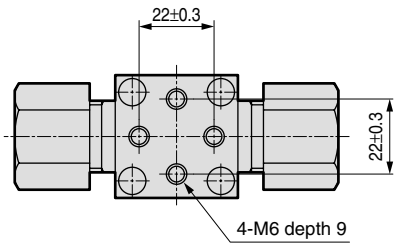

Dimensions

● With flow adjustment

·AMD3$^{1}_{2}$$_{3}$2-*-*-1

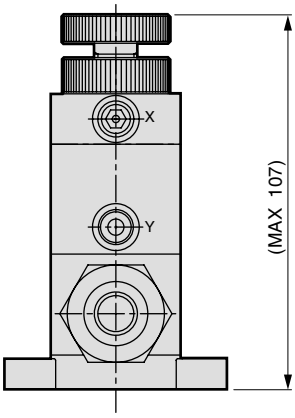

● With flow adjustment bypass

·AMD3$^{1}_{2}$$_{3}$2-*-*-3

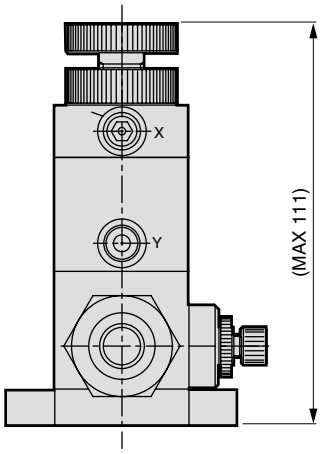

(Refer to the dimensions for the type with bypass for the other dimensions.)

● With bypass

·AMD3$^{1}_{2}$$_{3}$2-*-*-2/7

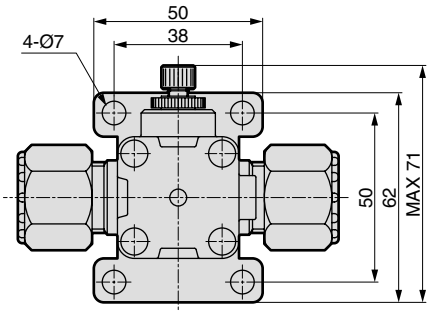

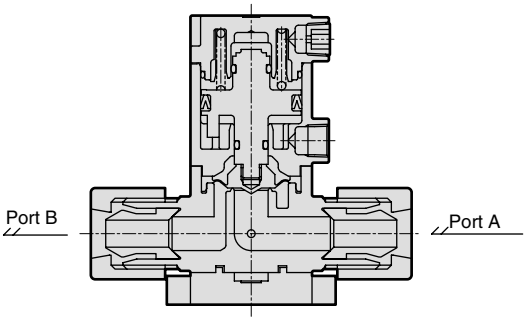

● With indicator

·AMD3$^{1}_{2}$$_{3}$2-*-*-6/7

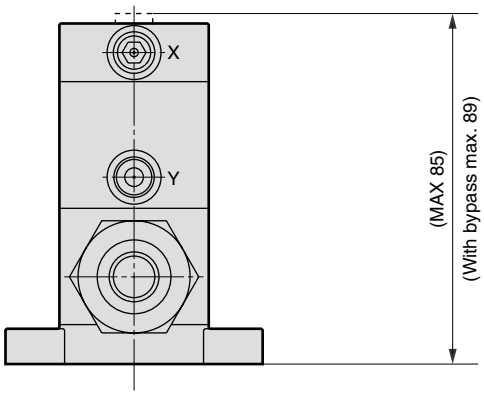

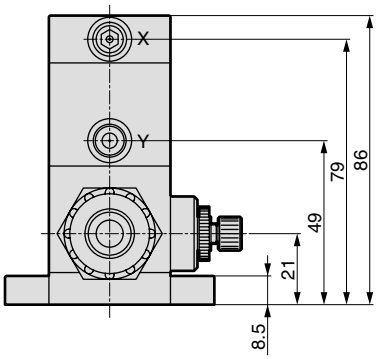

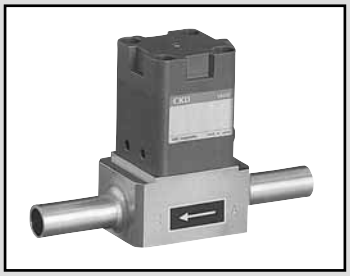

Stainless steel body air-operated valve for chemical liquids

AMD3$^{1}_{2}_{3}$2 Series

● Orifice: Ø8/Ø10

Specifications

Descriptions		AMD3$^{1}_{2}_{3}$2-8·3BT·6S	AMD3$^{1}_{2}_{3}$2-10·4BT·8S
Working fluid		Chemical liquids, pure water (Note 1)	
Fluid temperature ˚C		5 to 120	
Withstanding pressure MPa		0.9	
Working pressure range (A → B) MPa		0 to 0.3 (Note 2)	
Working pressure range (B → A) MPa		0 to 0.1 (Note 2)	
Valve seat leakage cm^3/min		0 (at, water pressure)	
Back pressure MPa		0 to 0.1 (Note 2)	
Ambient temperature ˚C		0 to 60	
Frequency		30 times/min or less	
Installation attitude		Free	
Connection		Rc1/4 3/8" SUS weld tube Double barbed fitting for 3/8" (Note 3)	Rc3/8 1/2" SUS weld tube Double barbed fitting for 1/2" (Note 3)
Orifice		Ø8	Ø10
Operation section	Operation pressure range MPa	NC/NO 0.3 to 0.5, double acting 0.3 to 0.4	
	Operation pressure connection port	Rc1/8	

Note 1: Check the compatibility of the product's configuration materials, working fluid, and ambient atmosphere before use.
Note 2: See page 56 for high-pressure specifications.
Note 3: For the double-barbed fitting, fluorine-based lubricant is applied on the sliding surface of the front ferrule and fitting.

Internal structure and parts list

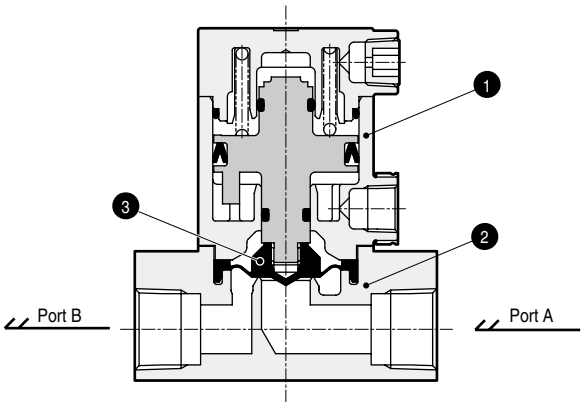

No.	Parts name	Material	Quantity
1	Actuator assembly	PPS	1
2	Body	SUS316L	1
3	Diaphragm	PTFE	1

The material differs with the model. Contact CKD for details.

 ⚠ Read the precautions on pages 7 to 12 in the introduction before use.

How to order

AMD3 (1) 2 - (8) - (0) - (A) - (4)

- Model No.
- (A) Actuation *1
- (B) Connection
- (C) Option
- (D) Actuator material
- (E) Operation port direction

Symbol	Descriptions \ Orifice	Ø8			Ø10		
	(B) Connection	8	3BT	6S	10	4BT	8S
		Rc 1/4	3/8" X t1.0 SUS weld tube	3/8" tube connection Double barbed fitting	Rc 3/8	1/2" X t1.24 SUS weld tube	1/2" tube connection Double barbed fitting
	(A) Actuation						
1	NC (normally closed)	●	●	●	●	●	●
2	NO (normally open)	●	●	●	●	●	●
3	Double acting	●	●	●	●	●	●
	(C) Option						
0	ON/OFF only	●	●	●	●	●	●
1	With flow adjustment	●	●	●	●	●	●
6	With indicator	●	●	●	●	●	●
	(D) Actuator material						
Blank	PPS	●	●	●	●	●	●
A	A5056	●	●	●	●	●	●
	(E) Operation port direction						
4	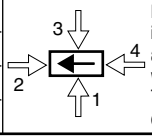 Indicates that fluid flows in direction of the black arrow when looking at valve from above. The white arrow indicates operation port direction.	●	●	●	●	●	●
1		●	●	●	●	●	●
2		●	●	●	●	●	●
3		●	●	●	●	●	●

Dimensions

● Rc screw type

·AMD3$^{1}_{2}_{3}$2-8/10

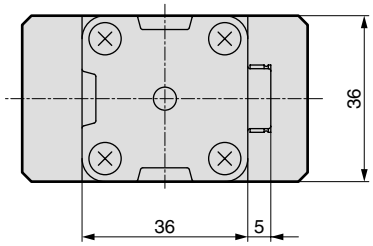

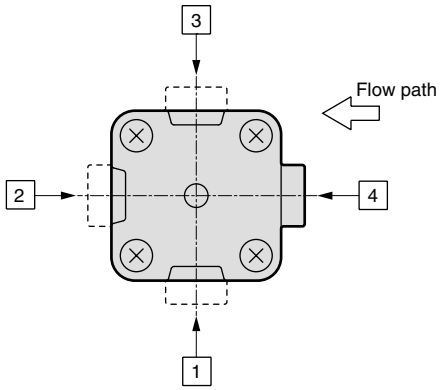

(Operation port direction)

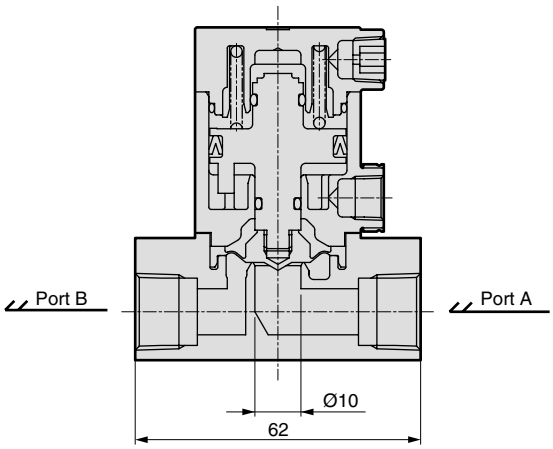

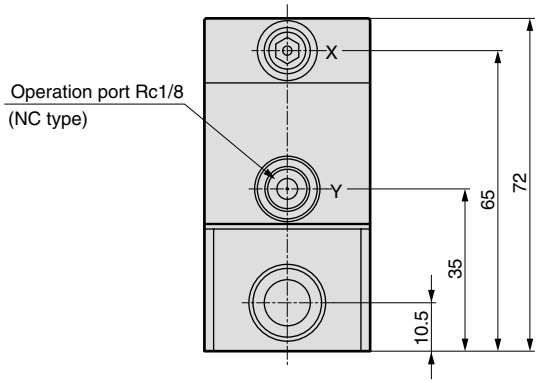

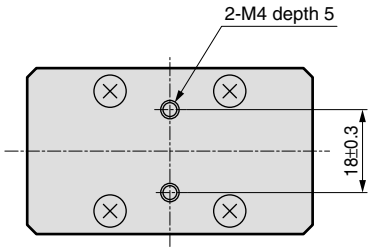

Dimensions

● SUS weld tube

·AMD3$^{1}_{2}{}_{3}$2-3BT/4BT

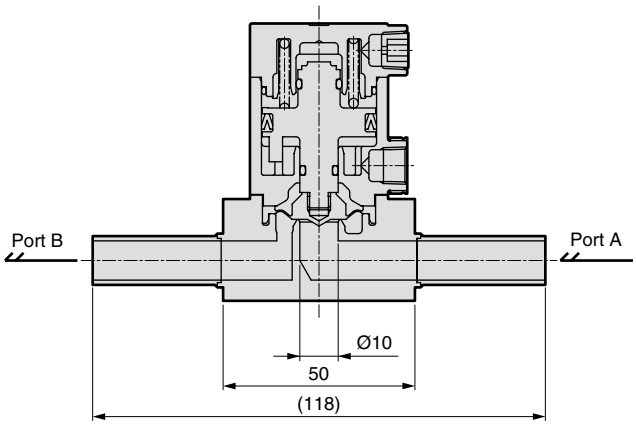

● Double barbed fitting

·AMD3$^{1}_{2}{}_{3}$2-6S/8S

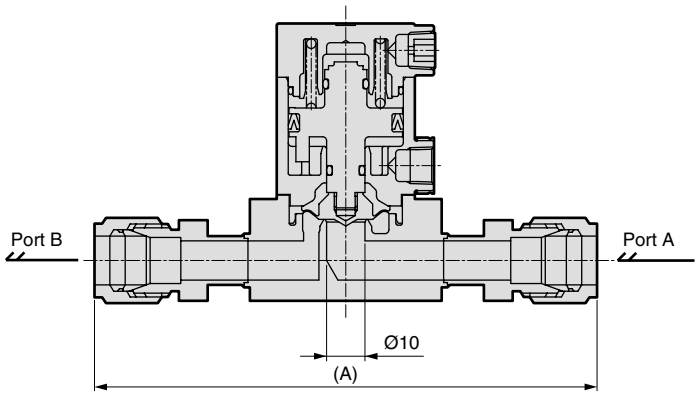

Dimension / Model No.	A
AMD3*2-6S	116
AMD3*2-8S	130

● With flow adjustment

·AMD3$^{1}_{2}{}_{3}$2-*-1

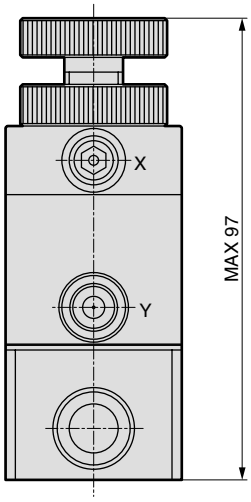

● With indicator

·AMD3$^{1}_{2}{}_{3}$2-*-6

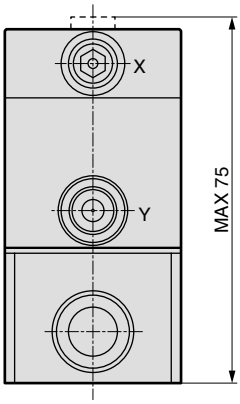

Air-operated valve for chemical liquids

AMD4$^{1}_{2}_{3}$2 Series

● Orifice: Ø14.7 to Ø16

CAD

Subject to Export Trade Control Ordinances

Specifications

Descriptions		AMD4$^{1}_{2}_{3}$2-*-16
Working fluid		Chemical liquids, pure water (Note 1)
Fluid temperature ˚C		5 to 90 (5 to 160) (Note 5)
Withstanding pressure MPa		0.9
Working pressure range (A → B) MPa		0 to 0.3 (Note 3)
Working pressure range (B → A) MPa		0 to 0.1 (Note 3)
Valve seat leakage cm³/min		0 (at, water pressure)
Back pressure MPa		0 to 0.1 (Note 3)
Ambient temperature ˚C		0 to 60
Frequency		20 times/min or less
Installation attitude		Free
Connection		OD3/4" tube connection (fitting integrated type)
Orifice		Ø16
Cv value		5
Bypass orifice (when bypass is installed)		Ø6
Operation section	Operation pressure range MPa	NC 0.3 to 0.5, NO 0.3 to 0.5 (0.3 to 0.35 for high temperature use), double acting 0.3 to 0.4 (0.2 to 0.25 for high temperature use)
	Operation pressure connection port	Rc1/8 (Note 2)

Note 1: Check the compatibility of the product's configuration materials, working fluid, and ambient atmosphere before use.
Note 2: Connect a resin fitting when connecting to the operation port.
(When using a metal fitting, select one with a reinforcement ring.)
Note 3: See page 56 for high-pressure specifications.
Note 4: See pages 70 and 71 for flow characteristics.
Note 5: 5 to 40 ˚C for hydrofluoric acids.

Internal structure and parts list

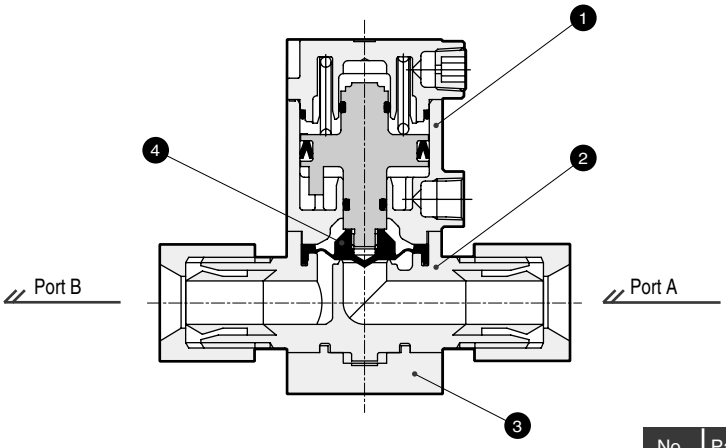

No.	Parts name	Material	Quantity
1	Actuator assembly	PPS	1
2	Body	PFA	1
3	Mounting plate	PPS	1
4	Diaphragm	PTFE	1

The material differs with the model. Contact CKD for details.

 ⚠ Read the precautions on pages 7 to 12 in the introduction before use.

How to order

AMD4 (1) 2 - (20BUS) - 16 - (1) - (4) (Y)

- Model No.
- Ⓐ Actuation
- Ⓑ Connection
- Orifice
- Ⓒ Option
- Ⓓ Operation port direction
- Ⓔ Fluid

Ⓐ Actuation	
1	NC (normally closed)
2	NO (normally open)
3	Double acting

Ⓑ Connection	20BUS	20BUJ	20BUP	20BUA	20BUR	20BUK	20BUW
	Super type Pillar fitting integrated type	Super 300 type Pillar fitting J series integrated type	Super 300 type Pillar fitting P series integrated type	F-LOCK 20A series fitting integrated type	F-LOCK 60 series fitting integrated type	Final lock fitting integrated type	FLARTEC fitting integrated type
	3/4" X 5/8" tube connection						
Symbol / Descriptions \ Orifice	Ø16	Ø16	Ø16	Ø16	Ø15.9	Ø16	Ø14.7
Ⓒ Option							
	PFA: PFA molded body, PTFE: PTFE machined body						
0 ON/OFF only	PFA	PFA	PFA	PFA	PFA	PFA	PFA
1 With flow adjustment							
2 With bypass	PFA	PFA	PFA	PFA	PTFE	PFA	PTFE
3 With flow adjustment and bypass							
6 ON/OFF, with indicator	PFA	PFA	PFA	PFA	PFA	PFA	PFA
7 With bypass/with indicator	PFA	PFA	PFA	PFA	PTFE	PFA	PTFE
Ⓓ Operation port direction							
4	●	●	●	●	●	●	●
1	●	●	●	●	●	●	●
2	●	●	●	●	●	●	●
3	●	●	●	●	●	●	●
Ⓔ Fluid							
Blank Standard	●	●	●	●	●	●	●
M For ammonia	●	●	●	●	●	●	●
P For nitric acid, for hydrofluoric acid (Note 2)	●	●	●	●	●	●	●
Y For high temperature (5 to 160˚C) (Note 1)	●	●	●	●		●	
E For high temperature (5 to 160˚C), PTFE machined body (Note 1)	●	●	●	●		●	

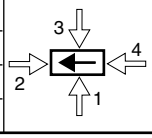

Indicates that fluid flows in direction of the black arrow when looking at valve from above. The white arrow indicates operation port direction.

● Model No. for type with coated metal section
(Orifice indication and hyphen (-) between Ⓒ and Ⓓ are not required.)

AMD4 (A) 2 - (B) - (C)(D)(E) C
Coated

● Model No. for type with operation port reinforcement ring
(Hyphen (-) between Ⓒ and Ⓓ is not required.)

AMD4 (A) 2 - (B) - 16 - (C)(D)(E) R
Orifice — With reinforcement ring

● Bottom installation type No.
(Orifice indication and hyphen (-) between Ⓒ and Ⓓ are not required.)

AMD4 (A) 2 - (B) - (C)(D)(E) X
Bottom installation

● Model No. for type with coated metal section + operation port reinforcement ring + bottom installation
(Orifice indication and hyphen (-) between Ⓒ and Ⓓ are not required.)

AMD4 (A) 2 - (B) - (C)(D)(E) C R X
Coated — With reinforcement ring — Bottom installation

Note on model No. selection

Note 1: The following Ⓒ options are not available: 2 (with bypass), 3 (with flow adjustment, bypass), 7 (with bypass/with indicator).
This valve is not compatible with nitric acid, hydrofluoric acid, or chlorine.

Note 2: C (with coated metal section) is included in the Ⓔ Fluid P item.

Dimensions

● Standard type

·AMD4$^{1}_{2}_{3}$2-[*1]-16

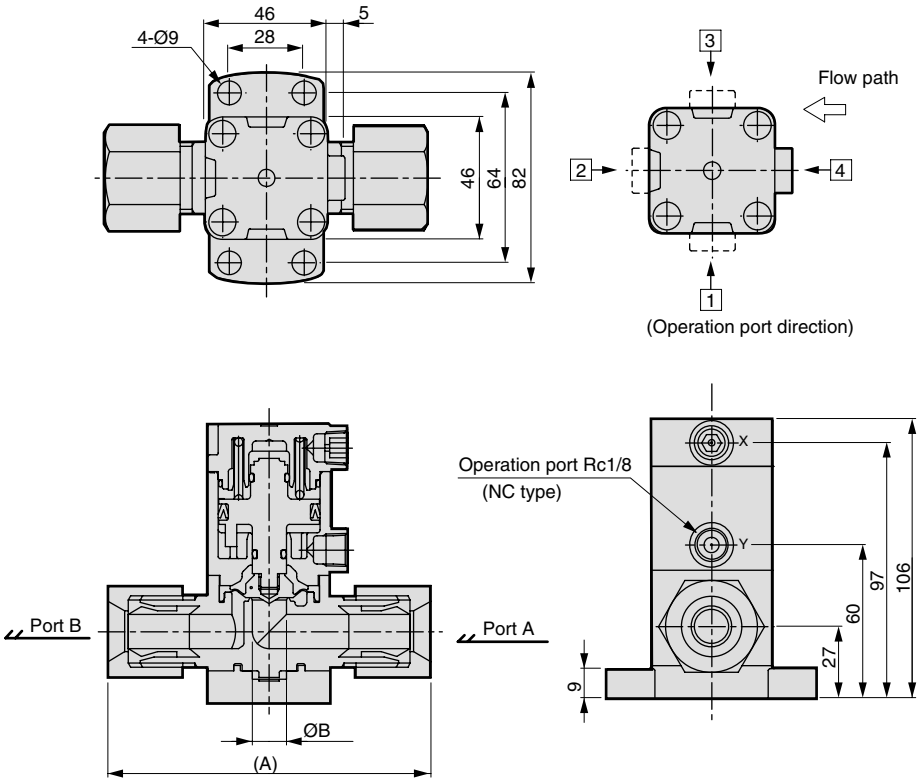

[*1] (Connection model No.)	A	B
20BUS	124	16
20BUJ	114	16
20BUP	118	16
20BUA	108	16
20BUR	134	15.9
20BUK	119	16
20BUW	122	14.7

● Bottom installation type

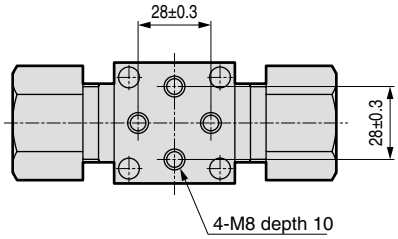

Dimensions

● With flow adjustment

·AMD4$^{1}_{2}_{3}$2-*-16-1

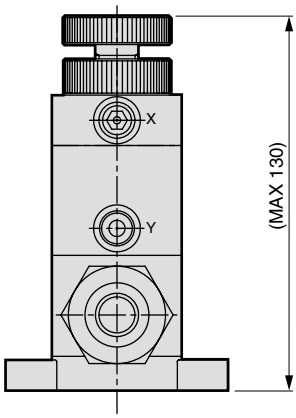

● With flow adjustment bypass

·AMD4$^{1}_{2}_{3}$2-*-16-3

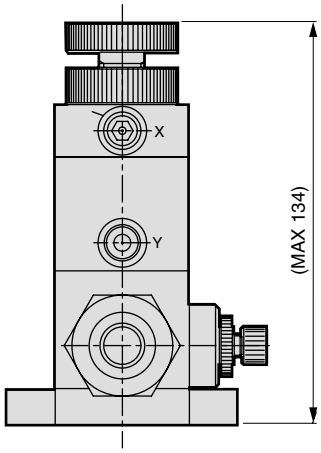

(Refer to the dimensions for the type with bypass for the other dimensions.)

● With bypass

·AMD4$^{1}_{2}_{3}$2-*-16-2/7

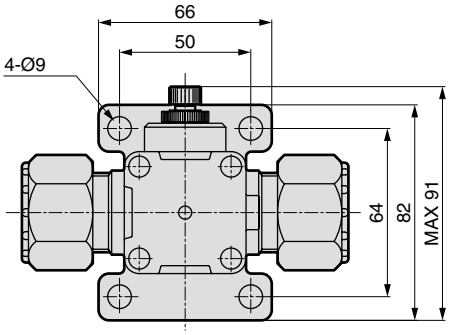

● With indicator

·AMD4$^{1}_{2}_{3}$2-*-16-6/7

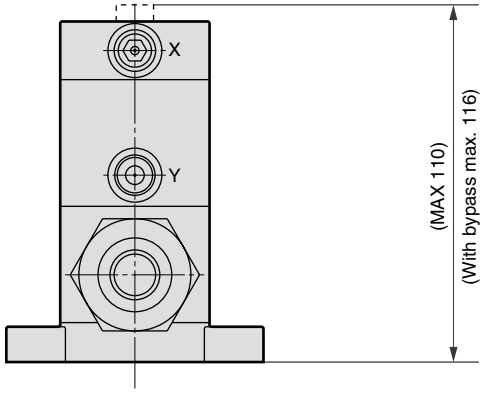

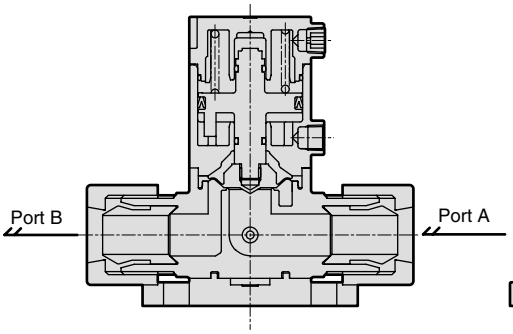

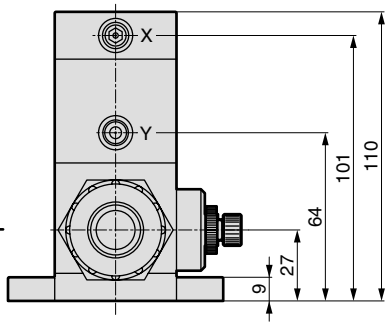

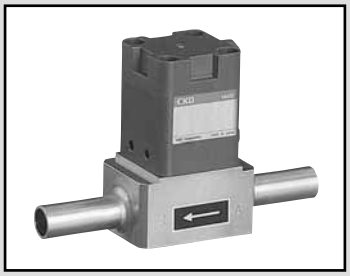

Stainless steel body air-operated valve for chemical liquids

AMD4$^{1}_{2}_{3}$2 Series

● Orifice: Ø16

Specifications

Descriptions		AMD4$^{1}_{2}_{3}$2-15/6BT/12S
Working fluid		Chemical liquids, pure water (Note 1)
Fluid temperature ˚C		5 to 120
Withstanding pressure MPa		0.9
Working pressure range (A → B) MPa		0 to 0.3 (Note 2)
Working pressure range (B → A) MPa		0 to 0.1 (Note 2)
Valve seat leakage cm³/min		0 (at, water pressure)
Back pressure MPa		0 to 0.1 (Note 2)
Ambient temperature ˚C		0 to 60
Frequency		20 times/min or less
Installation attitude		Free
Connection		Rc 1/2, 3/4" SUS weld tube, 3/4" double barbed fitting (Note 3)
Orifice		Ø16
Operation section	Operation pressure range MPa	NC/NO 0.3 to 0.5, double acting 0.3 to 0.4
	Operation pressure connection port	Rc1/8

Note 1: Check the compatibility of the product's configuration materials, working fluid, and ambient atmosphere before use.
Note 2: See page 56 for high-pressure specifications.
Note 3: For the double-barbed fitting, fluorine-based lubricant is applied on the sliding surface of the front ferrule and fitting.

Internal structure and parts list

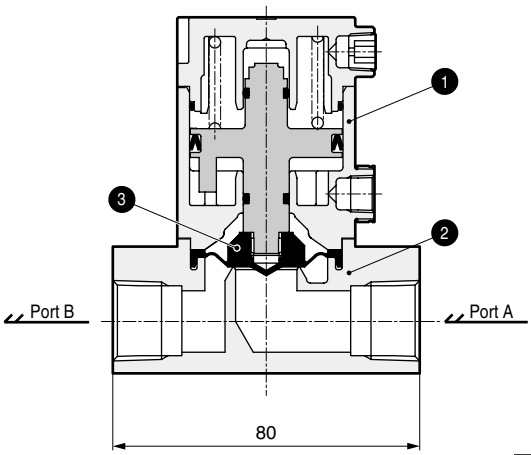

No.	Parts name	Material	Quantity
1	Actuator assembly	PPS	1
2	Body	SUS316L	1
3	Diaphragm	PTFE	1

The material differs with the model. Contact CKD for details.

 ⚠ Read the precautions on pages 7 to 12 in the introduction before use.

How to order

AMD4 (1) 2 - (15) - (0) - (A) - (4)

Model No.

Ⓐ Actuation

Ⓑ Connection

Ⓒ Option

Ⓓ Actuator material

Ⓔ Operation port direction

Ⓑ Connection		
15	6BT	12S
Rc 1/2	3/4" X t1.24 SUS weld tube	3/4" tube connection Double barbed fitting

Symbol	Descriptions \ Orifice	Ø16		
Ⓐ Actuation				
1	NC (normally closed)	●	●	●
2	NO (normally open)	●	●	●
3	Double acting	●	●	●
Ⓒ Option				
0	ON/OFF only	●	●	●
1	With flow adjustment	●	●	●
6	With indicator	●	●	●
Ⓓ Actuator material				
Blank	PPS	●	●	●
A	A5056	●	●	●
Ⓔ Operation port direction				
4	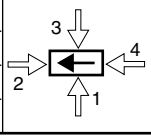 Indicates that fluid flows in direction of the black arrow when looking at valve from above. The white arrow indicates operation port direction.	●	●	●
1		●	●	●
2		●	●	●
3		●	●	●

Dimensions

● Rc screw type

·AMD4$^{1}_{2}_{3}$2-15

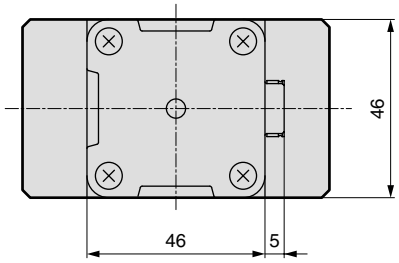

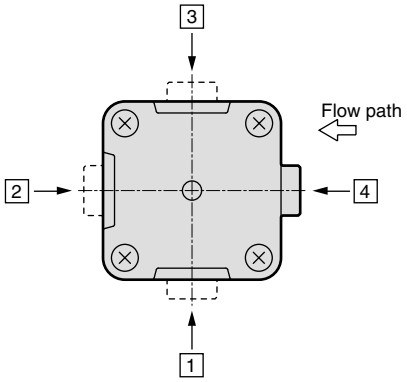

(Operation port direction)

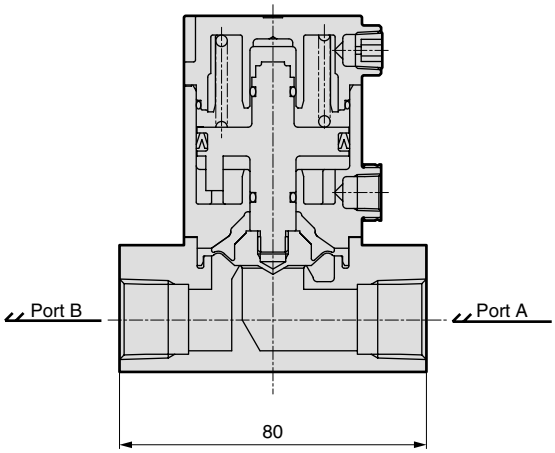

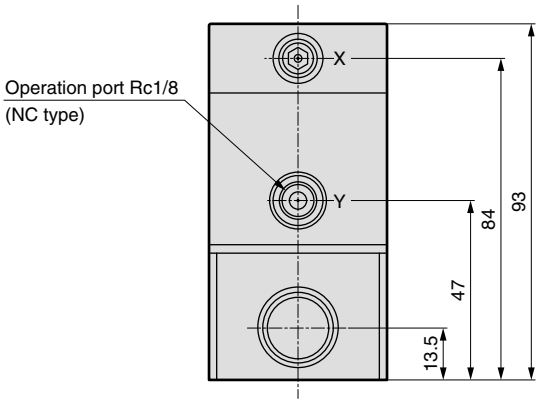

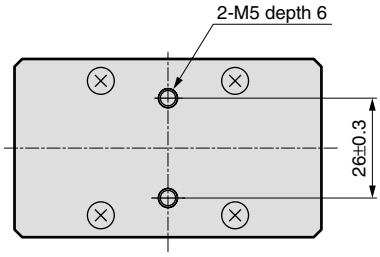

Dimensions

● SUS weld tube

·AMD4$^{1}_{2}{}_{3}$2-6BT

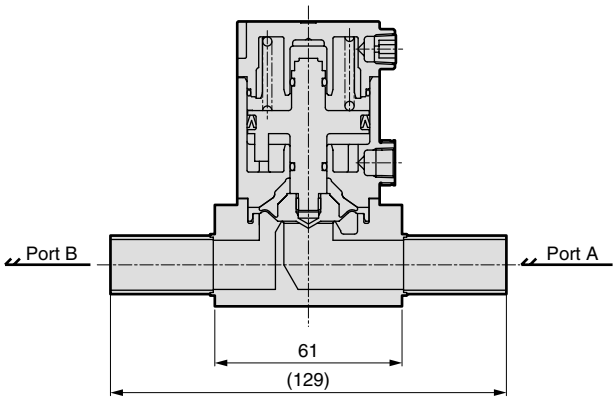

● Double barbed fitting

·AMD4$^{1}_{2}{}_{3}$2-12S

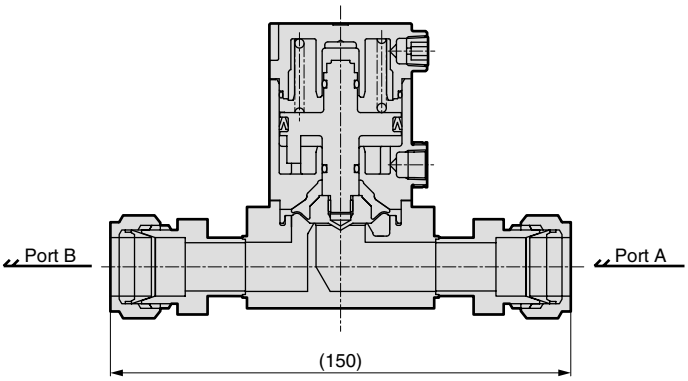

● With flow adjustment

·AMD4$^{1}_{2}{}_{3}$2-*-1

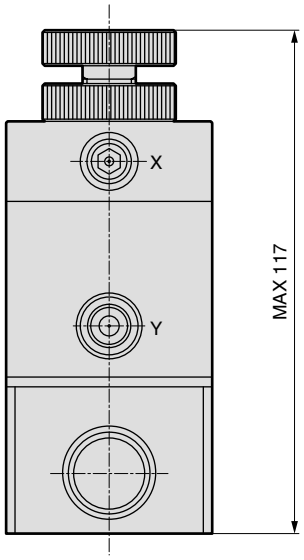

● With indicator

·AMD4$^{1}_{2}{}_{3}$2-*-6

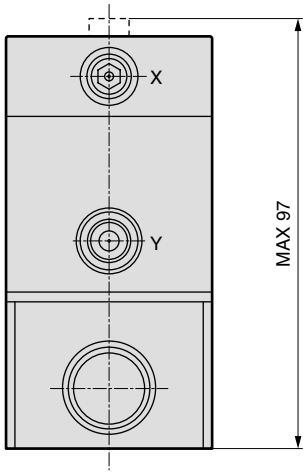

Air-operated valve for chemical liquids

AMD5$^{1}_{2}_{3}$2 Series

● Orifice: Ø20

CAD

Subject to Export Trade Control Ordinances

Specifications

Descriptions		AMD5$^{1}_{2}_{3}$2-*-20
Working fluid		Chemical liquids, pure water (Note 1)
Fluid temperature ˚C		5 to 90 (Note 2)
Withstanding pressure MPa		0.9
Working pressure range (A → B) MPa		0 to 0.3 (Note 4)
Working pressure range (B → A) MPa		0 to 0.1 (Note 4)
Valve seat leakage cm³/min		0 (at, water pressure)
Back pressure MPa		0 to 0.1 (Note 4)
Ambient temperature ˚C		0 to 60
Frequency		20 times/min or less
Installation attitude		Free
Connection		ODØ25 tube connection (fitting integrated type)/OD1" tube connection (fitting integrated type) Nominal 16, nominal 20 (PVC union fitting integrated type)
Orifice		Ø20
Bypass orifice (when bypass is installed)		Ø6
Cv value		8
Operation section	Operation pressure range MPa	NC/NO 0.3 to 0.5, double acting 0.3 to 0.4
	Operation pressure connection port	Rc1/8 (Note 3)

Note 1: Check the compatibility of the product's configuration materials, working fluid, and ambient atmosphere before use.
Note 2: 5 to 50 ˚C when using PVC union fitting connection. 5 to 40 ˚C when using hydrofluoric fitting.
Note 3: Connect a resin fitting when connecting to the operation port.
(When using a metal fitting, select one with a reinforcement ring.)
Note that a reinforcement ring is attached with the PVC union fitting integrated type, so a metal fitting can also be used.
Note 4: See page 56 for high-pressure specifications.
Note 5: See pages 70 and 71 for flow characteristics.

Internal structure and parts list

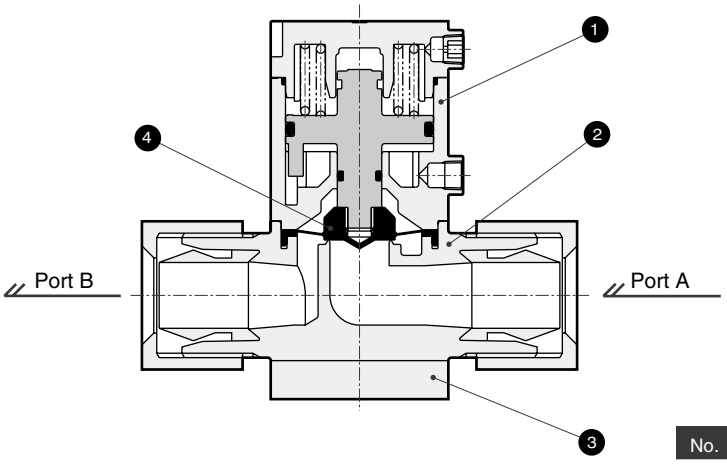

No.	Parts name	Material	Quantity
1	Actuator assembly	PPS	1
2	Body	PFA	1
3	Mounting plate	PPS	1
4	Diaphragm	PTFE	1

The material differs with the model. Contact CKD for details.

 ⚠ Read the precautions on pages 7 to 12 in the introduction before use.

How to order

AMD5 (1) 2 - (25BUS) - 20 - (1) - (4) (M)

- Model No.
- (1) Ⓐ Actuation
- (25BUS) Ⓑ Connection
- 20 Orifice
- (1) Ⓒ Option
- (4) Ⓓ Operation port direction
- (M) Ⓔ Fluid

Ⓐ Actuation	
1	NC (normally closed)
2	NO (normally open)
3	Double acting

Ⓑ Connection														
25US	25BUS	25UJ	25BUJ	25UP	25BUP	25BUA	25UR	25BUR	25UK	25BUK	25BUW	15AU	20AU
Super type Pillar fitting integrated type		Super 300 type Pillar fitting J series integrated type		Super 300 type Pillar fitting P series integrated type		F-LOCK 20A series fitting integrated type	F-LOCK 60 series fitting integrated type		Final lock fitting integrated type		FLARTEC fitting integrated type	PVC union fitting integrated type	
Ø25 X Ø22 tube connection	1" X 7/8" tube connection	Ø25 X Ø22 tube connection	1" X 7/8" tube connection	Ø25 X Ø22 tube connection	1" X 7/8" tube connection	1" X 7/8" tube connection (Note 2)	Ø25 X Ø22 tube connection	1" X 7/8" tube connection	Ø25 X Ø22 tube connection	1" X 7/8" tube connection	1" X 7/8" tube connection	Nominal 16	Nominal 20
Symbol / Descriptions \ Orifice	Ø20		Ø20		Ø20		Ø20	Ø20		Ø20		Ø20	Ø20	
Ⓒ Option (Note 1)														
	PFA: PFA molded body, PTFE: PTFE machined body, CPVC: CPVC machined body													
0	ON/OFF only	PFA		PFA		PFA		PFA	PTFE		PFA		PTFE	PFA
1	With flow adjustment													
2	With bypass	PTFE		PTFE		PTFE		PFA	PTFE		PTFE		PTFE	CPVC
3	With flow adjustment and bypass													
6	ON/OFF, with indicator	PFA		PFA		PFA		PFA	PTFE		PFA		PTFE	PFA
7	With bypass/with indicator	PTFE		PTFE		PTFE		PFA	PTFE		PTFE		PTFE	CPVC
Ⓓ Operation port direction														
4	Indicates that fluid flows in direction of the black arrow when looking at valve from above. The white arrow indicates operation port direction.	●	●	●	●	●	●	●	●	●	●	●	●	●	●
1		●	●	●	●	●	●	●	●	●	●	●	●	●	●
2		●	●	●	●	●	●	●	●	●	●	●	●	●	●
3		●	●	●	●	●	●	●	●	●	●	●	●	●	●
Ⓔ Fluid														
Blank	Standard	●	●	●	●	●	●	●	●	●	●	●	●	●	●
M	For ammonia	●	●	●	●	●	●	●	●	●	●	●	●	●	●
P	For nitric acid, for hydrofluoric acid (Note 1)	●	●	●	●	●	●	●	●	●	●	●	●		

● Model No. for type with coated metal section
(Orifice indication and hyphen (-) between Ⓒ and Ⓓ are not required.)

AMD5 (A) 2 - (B) - (C)(D)(E) C
- C: Coated

● Model No. for type with operation port reinforcement ring
(Hyphen (-) between Ⓒ and Ⓓ is not required.)

AMD5 (A) 2 - (B) - 20 - (C)(D)(E) R
- 20: Orifice
- R: With reinforcement ring

● Bottom installation type No.
(Orifice indication and hyphen (-) between Ⓒ and Ⓓ are not required.)

AMD5 (A) 2 - (B) - (C)(D)(E) X
- X: Bottom installation

● Model No. for type with coated metal section + operation port reinforcement ring + bottom installation
(Orifice indication and hyphen (-) between Ⓒ and Ⓓ are not required.)

AMD5 (A) 2 - (B) - (C)(D)(E) C R X
- C: Coated
- R: With reinforcement ring
- X: Bottom installation

Note on model No. selection

Note 1: C (with coated metal section) is included in the Ⓔ Fluid P item.

Note 2: Also usable for the Ø25 x Ø22 diameter tube connection.

Dimensions

● Standard type

·AMD5$^{1}_{2}_{3}$2- [*1] -20

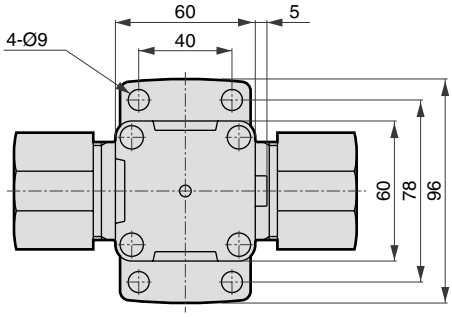

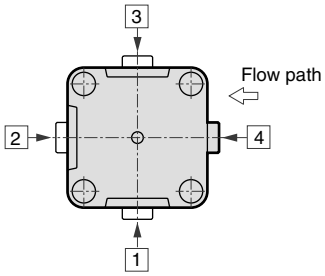

(Operation port direction)

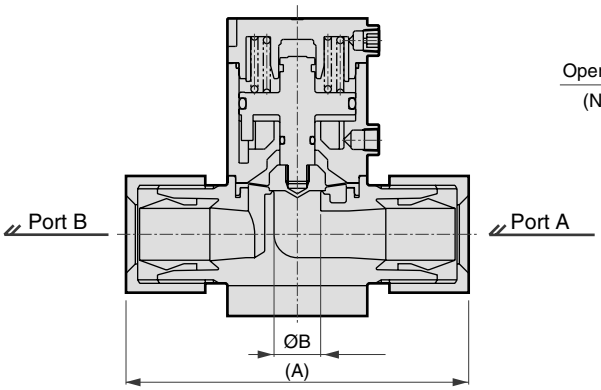

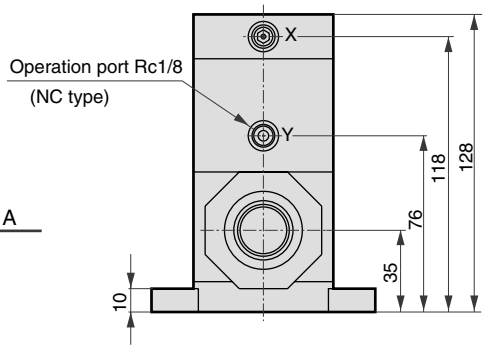

[*1] (Connection model No.)	A	B
25US	147	20
25BUS	147	20
25UJ	142	20
25BUJ	142	20
25UP	146	20
25BUP	146	20
25BUA	140	20
25UR	159	20
25BUR	162	20
25UK	141	20
25BUK	141	20
25BUW	156	20

● PVC union fitting integrated type

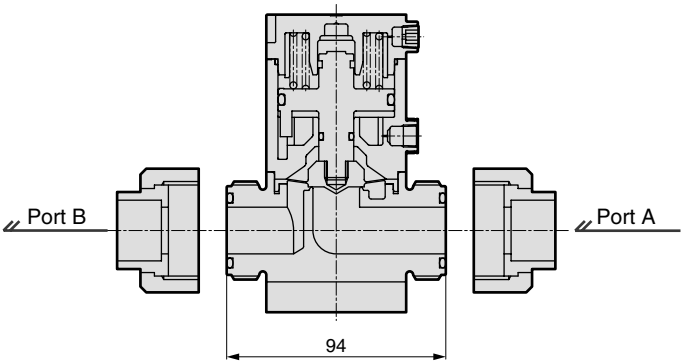

● Bottom installation type

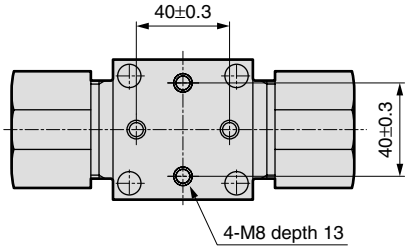

Dimensions

● With flow adjustment
·AMD5$^{1}_{2}{}_{3}$2-*-20-1

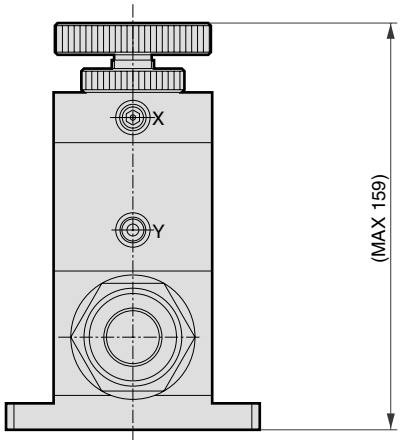

● With indicator
·AMD5$^{1}_{2}{}_{3}$2-*-20-6/7

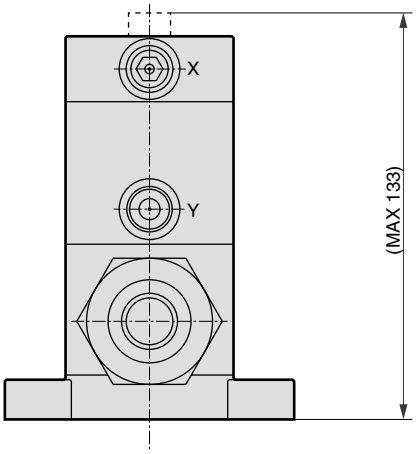

● With bypass
·AMD5$^{1}_{2}{}_{3}$2-*-20-2/7

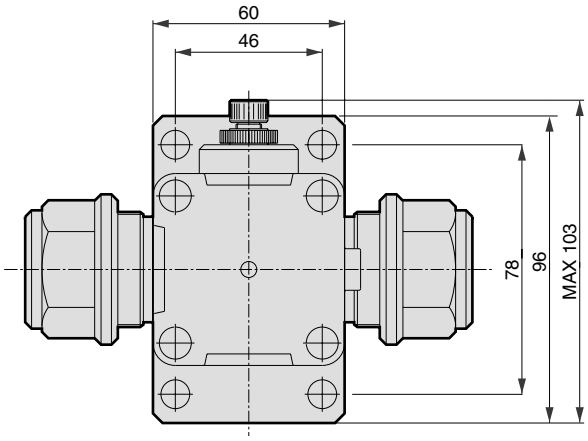

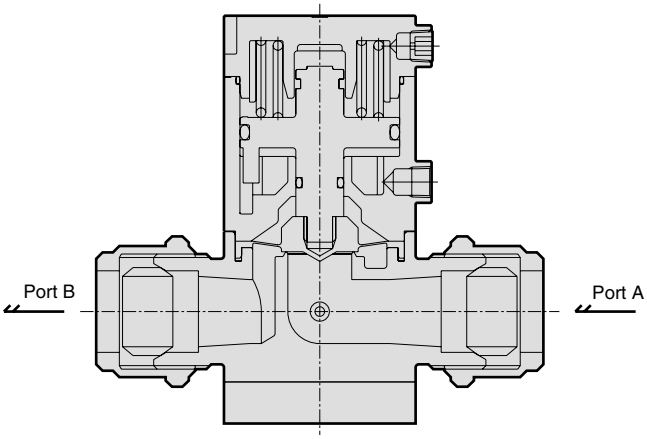

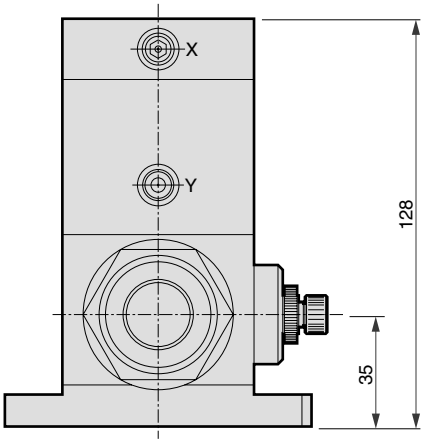

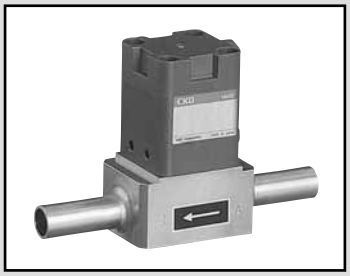

Stainless steel body air-operated valve for chemical liquids

AMD5$^{1}_{2}_{3}$2 Series

● Orifice: Ø20

Specifications

Descriptions		AMD5$^{1}_{2}_{3}$2-8BT/16S
Working fluid		Chemical liquids, pure water (Note 1)
Fluid temperature ˚C		5 to 120
Withstanding pressure MPa		0.9
Working pressure range (A → B) MPa		0 to 0.3 (Note 2)
Working pressure range (B → A) MPa		0 to 0.1 (Note 2)
Valve seat leakage cm³/min		0 (at, water pressure)
Back pressure MPa		0 to 0.1 (Note 2)
Ambient temperature ˚C		0 to 60
Frequency		20 times/min or less
Installation attitude		Free
Connection		1" SUS weld tube Double barbed fitting for 1" (Note 3)
Orifice		Ø20
Operation section	Operation pressure range MPa	NC/NO 0.3 to 0.5, double acting 0.3 to 0.4
	Operation pressure connection port	Rc1/8

Note 1: Check the compatibility of the product's configuration materials, working fluid, and ambient atmosphere before use.
Note 2: See page 56 for high-pressure specifications.
Note 3: For the double-barbed fitting, fluorine-based lubricant is applied on the sliding surface of the front ferrule and fitting.

Internal structure and parts list

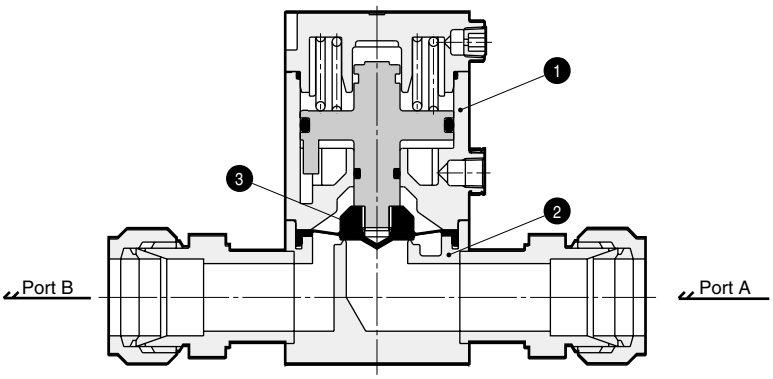

No.	Parts name	Material	Quantity
1	Actuator assembly	PPS	1
2	Body	SUS316L	1
3	Diaphragm	PTFE	1

The material differs with the model. Contact CKD for details.

 ⚠ Read the precautions on pages 7 to 12 in the introduction before use.

How to order

AMD5 (1) 2 - (16S) - (1) - (A) - (4)

Model No.

Ⓐ Actuation

Ⓑ Connection

Ⓒ Option

Ⓓ Actuator material

Ⓔ Operation port direction

Ⓑ Connection	
8BT	16S
1" X t1.65 SUS weld tube	1" tube connection Double barbed fitting

Symbol	Descriptions \ Orifice	Ø20	
Ⓐ Actuation			
1	NC (normally closed)	●	●
2	NO (normally open)	●	●
3	Double acting	●	●
Ⓒ Option			
0	ON/OFF only	●	●
1	With flow adjustment	●	●
6	With indicator	●	●
Ⓓ Actuator material			
Blank	PPS	●	●
A	A5056	●	●
Ⓔ Operation port direction			
4	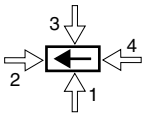 Indicates that fluid flows in direction of the black arrow when looking at valve from above. The white arrow indicates operation port direction.	●	●
1		●	●
2		●	●
3		●	●

Dimensions

● Double barbed fitting

·AMD5$^{1}_{2}_{3}$2-16S

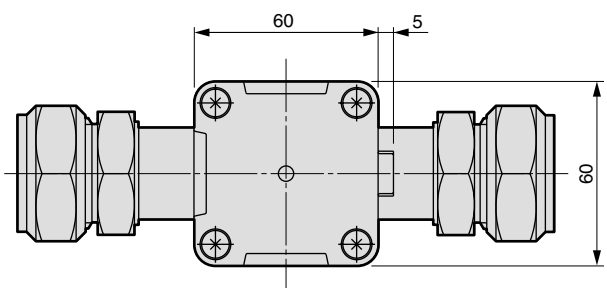

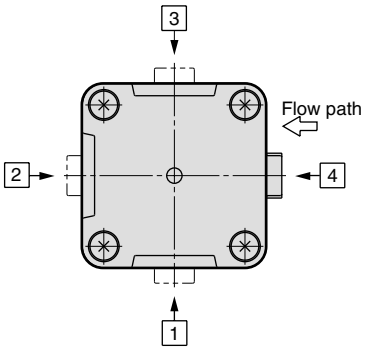

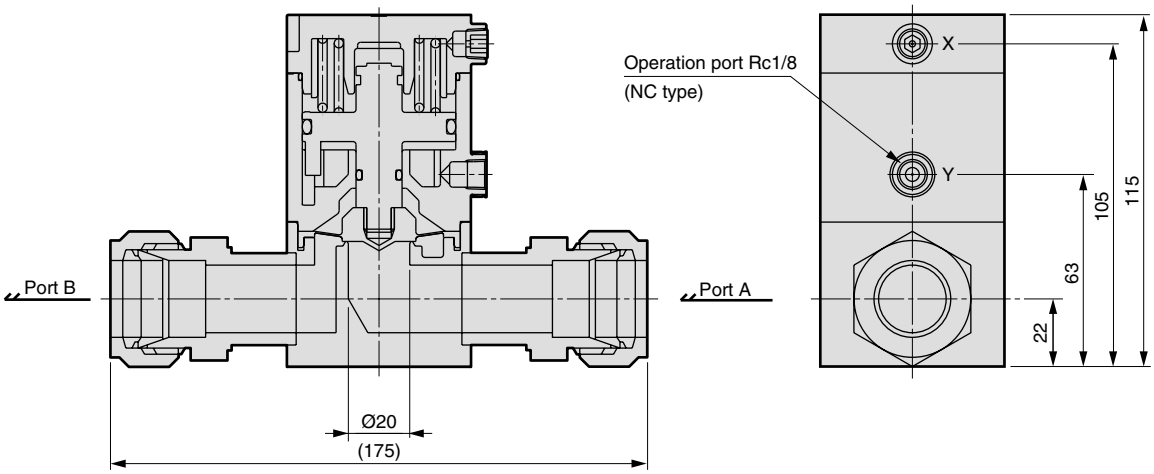

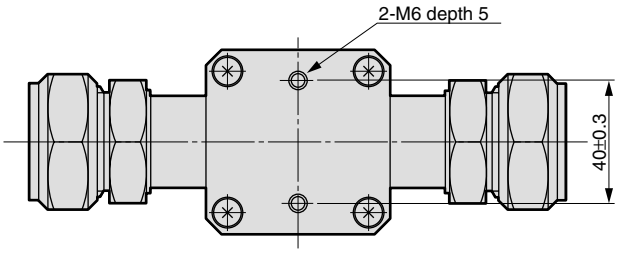

Dimensions

● SUS weld tube
·AMD5$^{1}_{2}{}_{3}$2-8BT

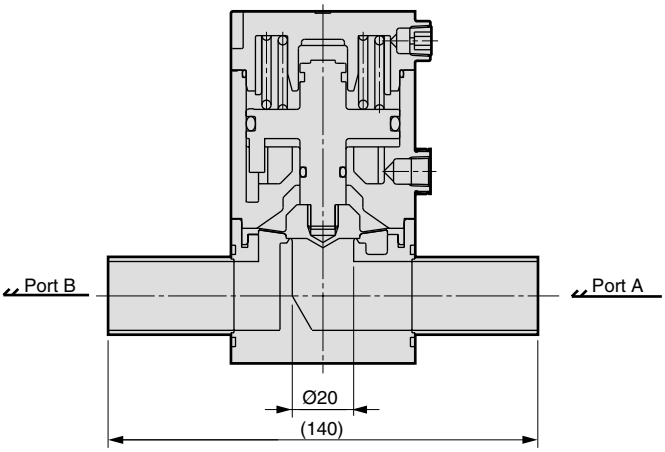

● With flow adjustment
·AMD5$^{1}_{2}{}_{3}$2-*-1

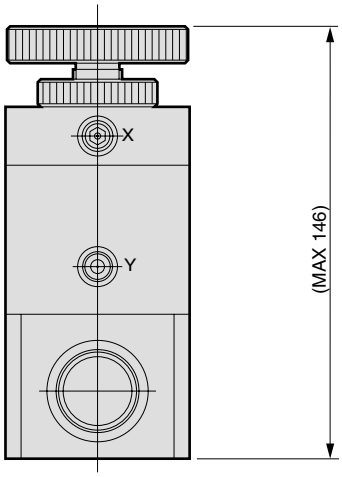

● With indicator
·AMD5$^{1}_{2}{}_{3}$2-*-6

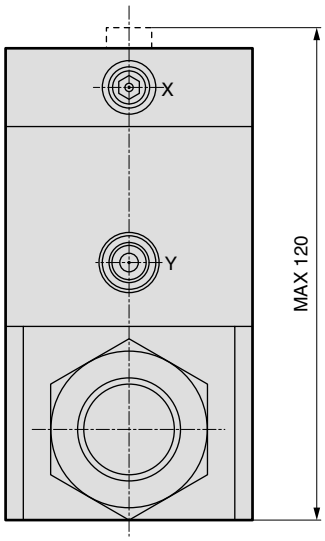

Air-operated valve for chemical liquids (3 port valve)

AMGZ0 / AMG00 Series

The fitting integrated 3-port valve eliminates dead space.

● Orifice: Ø1.6 to Ø4

Specifications

Descriptions		AMGZ*-*-2	AMG0*-*-4
Working fluid		Chemical liquids, pure water, N_2 gas, air	
Fluid temperature ˚C		5 to 80	
Withstanding pressure MPa		1	
Working pressure range (A -> B) MPa		0 to 0.5	
Working pressure range (B -> A) MPa		0 to 0.3	
Valve seat leakage cm^3/min		0 (at, water pressure)	
Back pressure MPa		0 to 0.3	
Ambient temperature ˚C		0 to 60	
Frequency		30 times/min or less	
Installation attitude		Free	
Connection		ODØ3 tube connection OD1/8" tube connection	ODØ6 tube connection OD1/4" tube connection
Orifice		Ø2	Ø4
Cv value		0.08	0.32
Operation section	Operation pressure MPa	0.3 to 0.5	
	Operation port	M5	

Internal structure and parts list

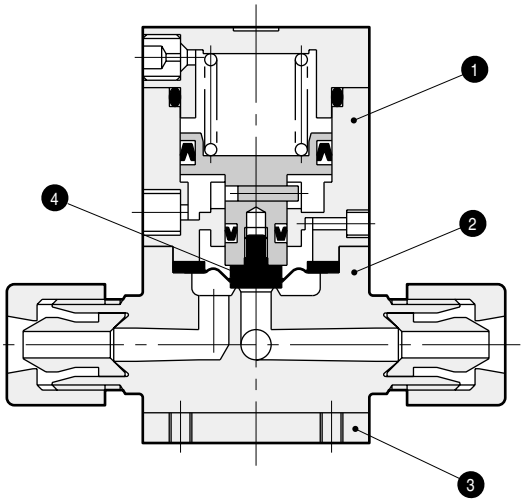

No.	Parts name	Material	Quantity
1	Actuator assembly	PPS	2
2	Body	PFA	1
3	Mounting plate	SUS	2
4	Diaphragm	PTFE	2

The material differs with the model. Contact CKD for details.

 ⚠ Read the precautions on pages 7 to 12 in the introduction before use.

How to order

● AMGZ0 Series

AMGZ0 - 3UF - 2

Model No. / Ⓐ Connection / Orifice

Descriptions	Ⓐ Connection				
	3US	6BUS	3UF	3UR	6BUR
	Super type Pillar fitting integrated type		F-LOCK 20 series fitting integrated type	F-LOCK 60 series fitting integrated type	
	Ø3 X Ø2 tube connection	1/8" X 0.086" tube connection	Ø3 X Ø2 tube connection	Ø3 X Ø2 tube connection	1/8" X 1/16" tube connection
Orifice					
Refer to the right	Ø2	Ø2	Ø2	Ø1.6	Ø1.6
Body material					
PFA molded body or PTFE machined body	PFA		PTFE	PTFE	

● AMG00 Series

AMG00 - 8BUF - 4

Model No. / Ⓐ Connection / Orifice

Descriptions	Ⓐ Connection												
	6US	8BUS	6UJ	8BUJ	6UP	8BUP	6UF	8BUF	6UR	8BUR	6UK	8BUK	8BUW
	Super type Pillar fitting integrated type		Super 300 type Pillar fitting J series integrated type		Super 300 type Pillar fitting P series integrated type		F-LOCK 20 series fitting integrated type		F-LOCK 60 series fitting integrated type		Final lock fitting integrated type		FLARTEC fitting integrated type
	Ø6 X Ø4 tube connection	1/4" X 5/32" tube connection	Ø6 X Ø4 tube connection	1/4" X 5/32" tube connection	Ø6 X Ø4 tube connection	1/4" X 5/32" tube connection	Ø6 X Ø4 tube connection	Ø6.35 X Ø4.3 tube connection	Ø6 X Ø4 tube connection	1/4" X 5/32" tube connection	Ø6 X Ø4 tube connection	1/4" X 5/32" tube connection	1/4" X 5/32" tube connection
Orifice													
Refer to the right	Ø4	Ø4	Ø4	Ø4	Ø4	Ø4	Ø4	Ø4	Ø3.5	Ø3.5	Ø4	Ø4	Ø3
Body material													
PFA molded body or PTFE machined body	PFA		PTFE		PTFE		PTFE		PTFE		PTFE		PTFE

⚠ Note on model No. selection

Note 1: Other bore sizes are also available. Contact CKD for details.

Dimensions

● Fitting integrated type

·AMGZ0-*1-2

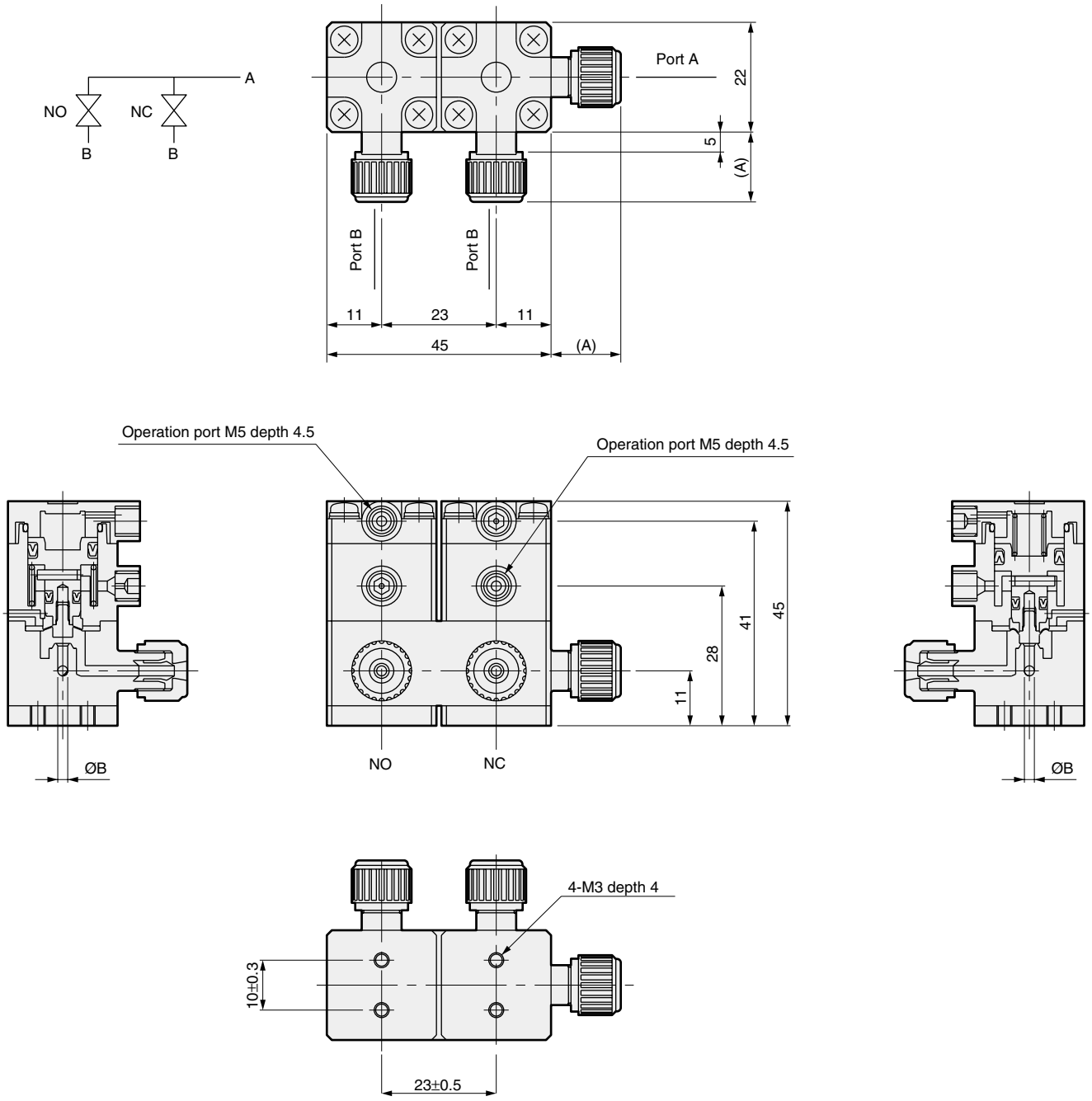

Dimension / *1 (Connection model No.)	A	B
3US	14	2
6BUS	14	2
3UF	9	2
3UR	17.5	1.6
6BUR	17.5	1.6

Dimensions

● Fitting integrated type

·AMG00-*1-4

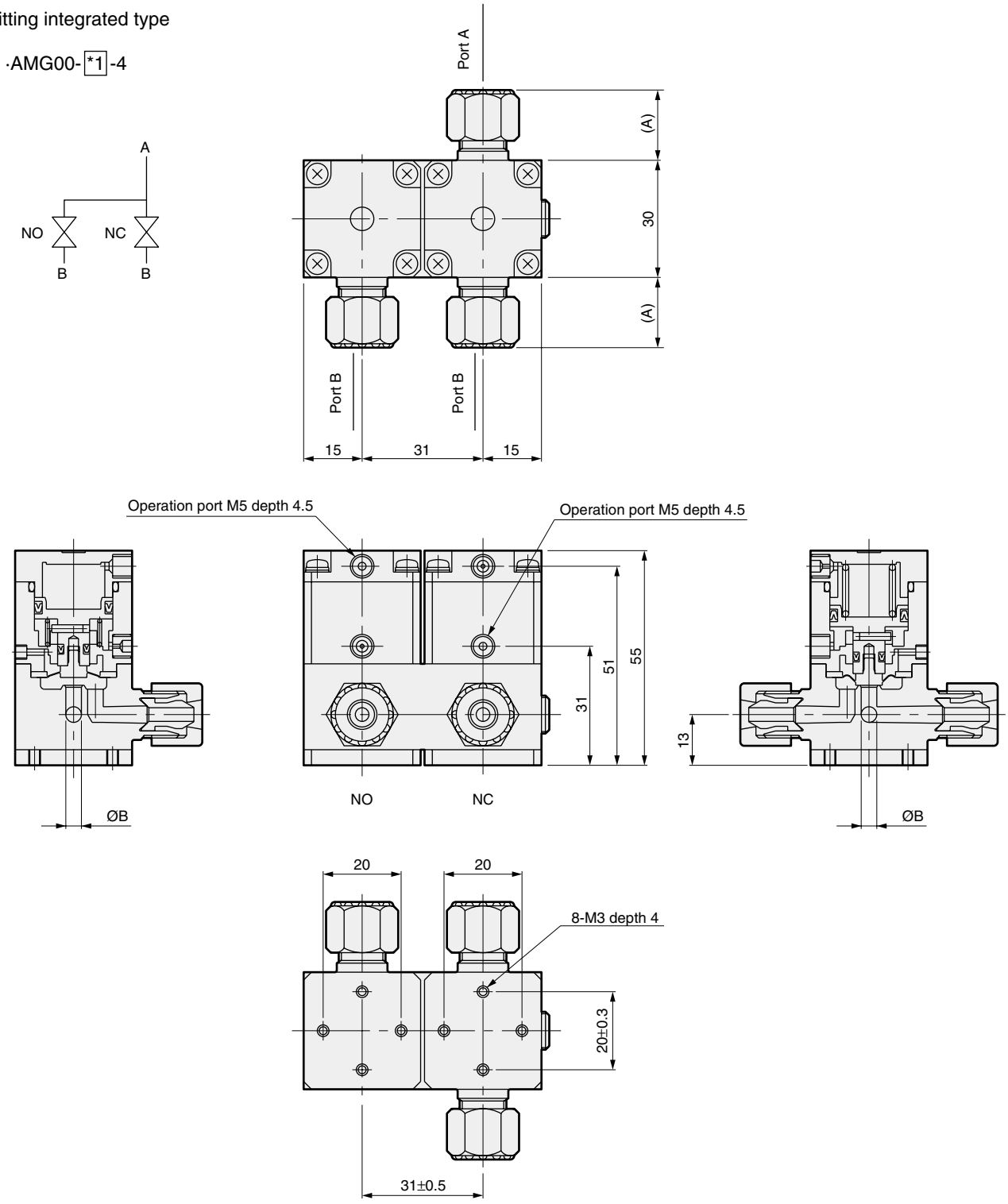

Dimension / *1 (Connection model No.)	A	B
6US	18	4
8BUS	18	4
6UJ	17	4
8BUJ	17	4
6UP	19	4
8BUP	19	4

Dimension / *1 (Connection model No.)	A	B
6UF	17	4
8BUF	17	4
6UR	30	3.5
8BUR	31	3.5
6UK	19	4
8BUK	19	4
8BUW	28	3

Air-operated valve for chemical liquids (3 port valve)

AMG$^{3}_{4}_{5}$02 Series

● Orifice: AMG302: Ø6 to Ø10
AMG402: Ø14.7 to Ø16
AMG502: Ø20

Subject to Export Trade Control Ordinances

*Target: AMG402 and 502 only

Specifications

Descriptions		AMG302	AMG402	AMG502
Working fluid		Chemical liquids, pure water (Note 1)		
Fluid temperature	˚C	5 to 90 (5 to 160) (Note 5)		5 to 90 (Note 5)
Withstanding pressure	MPa	0.9		
Working pressure range (A -> B)	MPa	0 to 0.3 (Note 4)		
Working pressure range (B -> A)	MPa	0 to 0.1 (Note 4)		
Valve seat leakage	cm³/min	0 (at, water pressure)		
Back pressure	MPa	0 to 0.1		
Ambient temperature	˚C	0 to 60		
Frequency		30 times/min or less	20 times/min or less	
Installation attitude		Free		
Connection		ODØ10, Ø12 tube connection (fitting integrated type) OD3/8", 1/2" tube connection (fitting integrated type)	OD3/4" tube connection (fitting integrated type)	ODØ25 tube connection (fitting integrated type) OD1" tube connection (fitting integrated type)
Orifice		Ø6 to Ø10 (Note 3)	Ø14.7 to Ø16 (Note 3)	Ø20
Operation section	Operation pressure range MPa	0.3 to 0.5		
	Operation pressure connection port	Rc1/8 (Note 2)		

Note 1: Check the compatibility of the product's configuration materials, working fluid, and ambient atmosphere before use.
Note 2: Connect a resin fitting when connecting to the operation port.
When using a metal fitting, select one with a reinforcement ring.
Note 3: Confirm the orifice for each connection in the Model indication section.
Note 4: See page 56 for high-pressure specifications.
Note 5: 5 to 40 ˚C for hydrofluoric acids.

 ⚠ Read the precautions on pages 7 to 12 in the introduction before use.

Internal structure and parts list

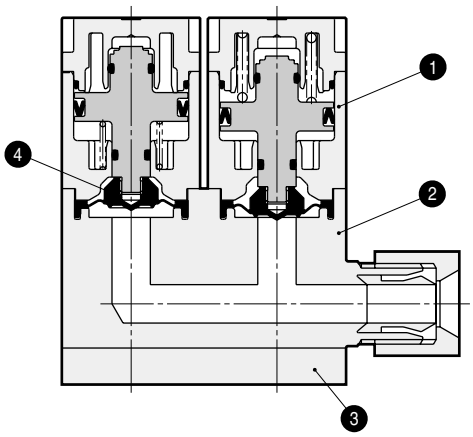

No.	Parts name	Material
1	Actuator assembly	PPS
2	Body	PTFE
3	Mounting plate	PP
4	Diaphragm	PTFE

The material differs with the model. Contact CKD for details.

How to order

● AMG302 Series (Connection: Ø10, 3/8" tube)

AMG302 - 10BUS - 0 - M L

- AMG302: Model No.
- 10BUS: Ⓐ Connection
- 0: Ⓑ Option
- M: Ⓒ Fluid
- L: Ⓓ Port A position

		Ⓐ Connection												
		10US	10BUS	10UJ	10BUJ	10UP	10BUP	10UA	10BUA	10UR	10BUR	10UK	10BUK	10BUW
		Super type Pillar fitting integrated type		Super 300 type Pillar fitting J series integrated type		Super 300 type Pillar fitting P series integrated type		F-LOCK 20A series fitting integrated type		F-LOCK 60 series fitting integrated type		Final lock fitting integrated type		FLARTEC fitting integrated type
		Ø10 X Ø8 tube connection	3/8" X 1/4" tube connection	Ø10 X Ø8 tube connection	3/8" X 1/4" tube connection	Ø10 X Ø8 tube connection	3/8" X 1/4" tube connection	Ø10 X Ø8 tube connection	3/8" X 1/4" tube connection	Ø10 X Ø8 tube connection	3/8" X 1/4" tube connection	Ø10 X Ø8 tube connection	3/8" X 1/4" tube connection	3/8" X 1/4" tube connection
Symbol	Descriptions / Orifice	Ø8		Ø8		Ø8		Ø8		Ø7	Ø6	Ø8		Ø6.3
Ⓑ Option														
0	ON/OFF only	●	●	●	●	●	●	●	●	●	●	●	●	●
1	With flow adjustment	●	●	●	●	●	●	●	●	●	●	●	●	●
6	With indicator	●	●	●	●	●	●	●	●	●	●	●	●	●
Ⓒ Fluid														
Blank	Standard	●	●	●	●	●	●	●	●	●	●	● (Note 1)	● (Note 1)	●
M	For ammonia	●	●	●	●	●	●	●	●	●	●	● (Note 1)	● (Note 1)	●
P	For nitric acid, for hydrofluoric acid (Note 3)	●	●	●	●	●	●	●	●	●	●	● (Note 1)	● (Note 1)	●
Y	For high temperature (5 to 160˚C) (Note 2)	●	●	●	●	●	●	●	●			● (Note 1)	● (Note 1)	
Ⓓ Port A position														
Blank	Right	●	●	●	●	●	●	●	●	●	●	●	●	●
L	Left	●	●	●	●	●	●	●	●	●	●	●	●	●

Available with PTFE machined body.

● Model No. for type with coated metal section

AMG302 - A - B - C D C

- C: Coated

● Model No. for type with operation port reinforcement ring

AMG302 - A - B - C D R

- R: With reinforcement ring

● Model No. for type with coated metal section + operation port reinforcement ring

AMG302 - A - B - C D C R

- C: Coated
- R: With reinforcement ring

⚠ Note on model No. selection

Note 1: The final lock fitting nut and operation air piping could interfere, so check dimensions before selecting.

Note 2: This valve is not compatible with nitric acid, hydrofluoric acid, or chlorine.

Note 3: C (with coated metal section) is included in the Ⓒ Fluid P item.

How to order

● AMG302 Series (Connection: Ø12, 1/2" tube)

AMG302 - 15BUA - 1 - M L

- AMG302: Model No.
- 15BUA: Ⓐ Connection
- 1: Ⓑ Option
- M: Ⓒ Fluid
- L: Ⓓ Port A position

Symbol	Descriptions \ Orifice	12US	15BUS	12UJ	15BUJ	12UP	15BUP	12UA	15BUA	12UR	15BUR	12UK	15BUK	15BUW
	Ⓐ Connection	Super type Pillar fitting integrated type		Super 300 type Pillar fitting J series integrated type		Super 300 type Pillar fitting P series integrated type		F-LOCK 20A series fitting integrated type		F-LOCK 60 series fitting integrated type		Final lock fitting integrated type		FLARTEC fitting integrated type
		Ø12 X Ø10 tube connection	1/2" X 3/8" tube connection	Ø12 X Ø10 tube connection	1/2" X 3/8" tube connection	Ø12 X Ø10 tube connection	1/2" X 3/8" tube connection	Ø12 X Ø10 tube connection	1/2" X 3/8" tube connection	Ø12 X Ø10 tube connection	1/2" X 3/8" tube connection	Ø12 X Ø10 tube connection	1/2" X 3/8" tube connection	1/2" X 3/8" tube connection
	Orifice	Ø10		Ø10		Ø10		Ø10		Ø9		Ø10		Ø9.4
	Ⓑ Option													
0	ON/OFF only	●	●	●	●	●	●	●	●	●	●	●	●	●
1	With flow adjustment	●	●	●	●	●	●	●	●	●	●	●	●	●
6	With indicator	●	●	●	●	●	●	●	●	●	●	●	●	●
	Ⓒ Fluid													
Blank	Standard	●	●	●	●	●	●	●	●	●	●	● (Note 1)	● (Note 1)	●
M	For ammonia	●	●	●	●	●	●	●	●	●	●	● (Note 1)	● (Note 1)	●
P	For nitric acid, for hydrofluoric acid (Note 3)	●	●	●	●	●	●	●	●	●	●	● (Note 1)	● (Note 1)	●
Y	For high temperature (5 to 160˚C) (Note 2)	●	●	●	●	●	●	●	●			● (Note 1)	● (Note 1)	
	Ⓓ Port A position													
Blank	Right	●	●	●	●	●	●	●	●	●	●	●	●	●
L	Left	●	●	●	●	●	●	●	●	●	●	●	●	●

Available with PTFE machined body.

● Model No. for type with coated metal section

AMG302 - A - B - C D C

- C: Coated

● Model No. for type with operation port reinforcement ring

AMG302 - A - B - C D R

- R: With reinforcement ring

● Model No. for type with coated metal section + operation port reinforcement ring

AMG302 - A - B - C D C R

- C: Coated
- R: With reinforcement ring

⚠ Note on model No. selection

Note 1: The final lock fitting nut and operation air piping could interfere, so check dimensions before selecting.
Note 2: This valve is not compatible with nitric acid, hydrofluoric acid, or chlorine.
Note 3: C (with coated metal section) is included in the Ⓒ Fluid P item.

How to order

● AMG402 Series

AMG402 - 20BUJ - 0 - M L

- AMG402: Model No.
- 20BUJ: Ⓐ Connection
- 0: Ⓑ Option
- M: Ⓒ Fluid
- L: Ⓓ Port A position

		Ⓐ Connection						
		20BUS	20BUJ	20BUP	20BUA	20BUR	20BUK	20BUW
		Super type Pillar fitting integrated type	Super 300 type Pillar fitting P series integrated type	Super 300 type Pillar fitting P series integrated type	F-LOCK 20A series fitting integrated type	F-LOCK 60 series fitting integrated type	Final lock fitting integrated type	FLARTEC fitting integrated type
		3/4" X 5/8" tube connection						
Symbol	Descriptions / Orifice	Ø16	Ø16	Ø16	Ø16	Ø15	Ø16	Ø14.7
Ⓑ Option								
0	ON/OFF only	●	●	●	●	●	●	●
1	With flow adjustment	●	●	●	●	●	●	●
6	With indicator	●	●	●	●	●	●	●
Ⓒ Fluid								
Blank	Standard	●	●	●	●	●	●	●
M	For ammonia	●	●	●	●	●	●	●
P	For nitric acid, for hydrofluoric acid (Note 2)	●	●	●	●	●	●	●
Y	For high temperature (5 to 160˚C) (Note 1)	●	●	●	●		●	
Ⓓ Port A position								
Blank	Right	●	●	●	●	●	●	●
L	Left	●	●	●	●	●	●	●

Available with PTFE machined body.

● Model No. for type with coated metal section

AMG402 - A - B - C D C

- C: Coated

● Model No. for type with operation port reinforcement ring

AMG402 - A - B - C D R

- R: With reinforcement ring

● Model No. for type with coated metal section + operation port reinforcement ring

AMG402 - A - B - C D C R

- C: Coated
- R: With reinforcement ring

⚠ Note on model No. selection

Note 1: This valve is not compatible with nitric acid, hydrofluoric acid, or chlorine.

Note 2: C (with coated metal section) is included in the Ⓒ Fluid P item.

How to order

● AMG502 Series

AMG502 - 25UA - 0 - M L

- AMG502: Model No.
- 25UA: Ⓐ Connection
- 0: Ⓑ Option
- M: Ⓒ Fluid
- L: Ⓓ Port A position

		Ⓐ Connection											
		25US	25BUS	25UJ	25BUJ	25UP	25BUP	25BUA	25UR	25BUR	25UK	25BUK	25BUW
		Super type Pillar fitting integrated type		Super 300 type Pillar fitting J series integrated type		Super 300 type Pillar fitting P series integrated type		F-LOCK 20A series fitting integrated type	F-LOCK 60 series fitting integrated type		Final lock fitting integrated type		FLARTEC fitting integrated type
		Ø25 X Ø22 tube connection	1" X 7/8" tube connection	Ø25 X Ø22 tube connection	1" X 7/8" tube connection	Ø25 X Ø22 tube connection	1" X 7/8" tube connection	1" X 7/8" tube connection (Note 2)	Ø25 X Ø22 tube connection	1" X 7/8" tube connection	Ø25 X Ø22 tube connection	1" X 7/8" tube connection	1" X 7/8" tube connection
Symbol	Descriptions / Orifice	Ø20		Ø20		Ø20		Ø20	Ø20		Ø20		Ø20
Ⓑ Option													
0	ON/OFF only	●	●	●	●	●	●	●	●	●	●	●	●
1	With flow adjustment	●	●	●	●	●	●	●	●	●	●	●	●
6	With indicator	●	●	●	●	●	●	●	●	●	●	●	●
Ⓒ Fluid													
Blank	Standard	●	●	●	●	●	●	●	●	●	●	●	●
M	For ammonia	●	●	●	●	●	●	●	●	●	●	●	●
P	For nitric acid, for hydrofluoric acid (Note 1)	●	●	●	●	●	●	●	●	●	●	●	●
Ⓓ Port A position													
Blank	Right	●	●	●	●	●	●	●	●	●	●	●	●
L	Left	●	●	●	●	●	●	●	●	●	●	●	●

Available with PTFE machined body.

● Model No. for type with coated metal section

AMG502 - A - B - C D C

C: Coated

● Model No. for type with operation port reinforcement ring

AMG502 - A - B - C D R

R: With reinforcement ring

● Model No. for type with coated metal section + operation port reinforcement ring

AMG502 - A - B - C D C R

C: Coated R: With reinforcement ring

⚠ Note on model No. selection

Note 1: C (with coated metal section) is included in the Ⓒ Fluid P item.
Note 2: Also usable for the Ø25 x Ø22 diameter tube connection.

Dimensions

● Standard type

·AMG302- *1

·AMG402- *1

·AMG502- *1

Note: NC and NO layouts differ with the A port position.
The valve closest to the A port is the NC valve. The other valve is NO.

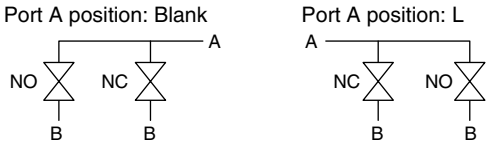

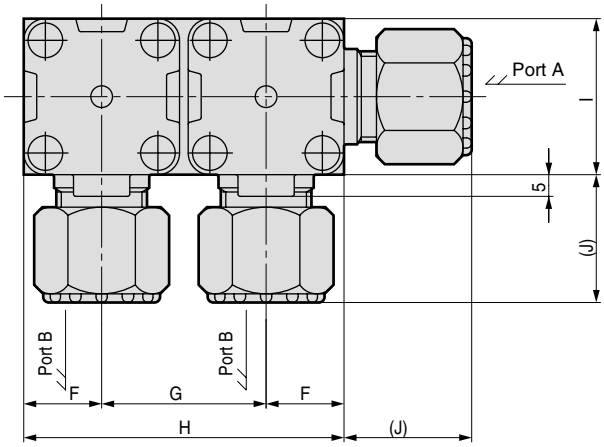

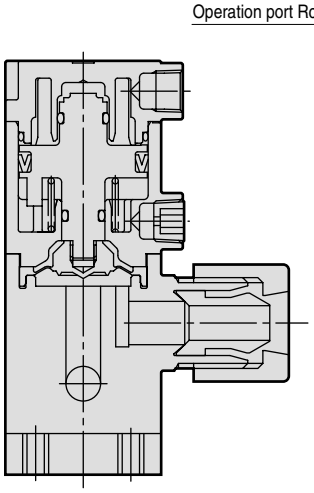

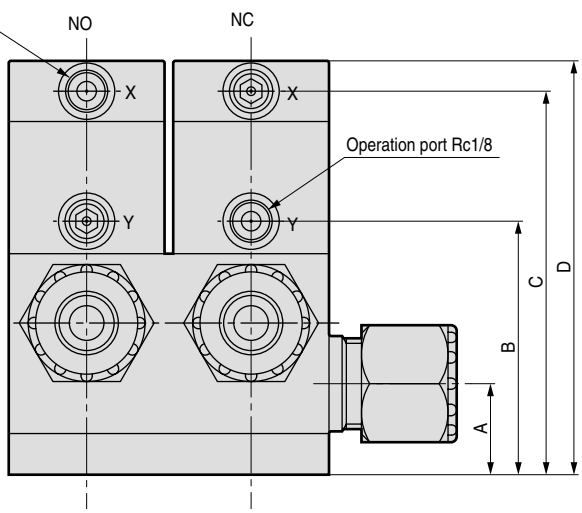

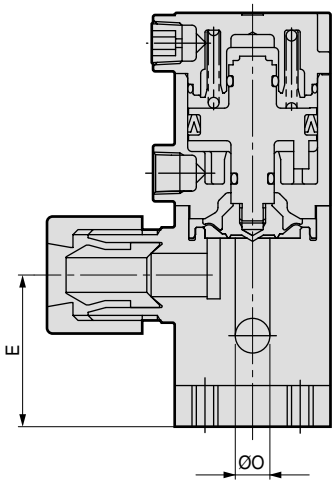

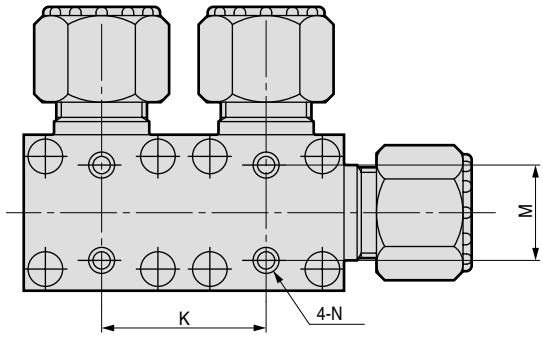

Dimensions

Model No.	A	B	C	D	E	F	G	H	I	K	M	N
AMG302	21	59	89	96	35	18	38	74	36	38±0.3	22	M6 depth 9
AMG402	27	79	116	125	46	23	48	94	46	48±0.4	28	M8 depth 10
AMG502	35	101	143	153	60	30	62	122	60	62±0.4	40	M8 depth 13

AMG3 (10mm·3/8")

*1 (Connection model No.)	J	O
10US	25	8
10BUS	25	8
10UJ	23	8
10BUJ	23	8
10UP	25	8
10BUP	25	8
10UA	21	8
10BUA	21	8
10UR	37	7
10BUR	39	6
10UK	30	8
10BUK	30	8
10BUW	32.5	6.3

AMG3 (12mm·1/2")

*1 (Connection model No.)	J	O
12US	29.5	10
15BUS	29.5	10
12UJ	27	10
15BUJ	27	10
12UP	29	10
15BUP	29	10
12UA	25	10
15BUA	25	10
12UR	37	9
15BUR	39	9
12UK	33	10
15BUK	33	10
15BUW	33.5	9.4

AMG4

*1 (Connection model No.)	J	O
20BUS	39	16
20BUJ	34	16
20BUP	36	16
20BUA	31	16
20BUR	44	15
20BUK	36.5	16
20BUW	38	14.7

AMG5

*1 (Connection model No.)	J	O
25US	43.5	20
25BUS	43.5	20
25UJ	41	20
25BUJ	41	20
25UP	43	20
25BUP	43	20
25BUA	40	20
25UR	49.5	20
25BUR	51	20
25UK	40.5	20
25BUK	40.5	20
25BUW	48	20

● With flow adjustment
·AMG*02-*-1

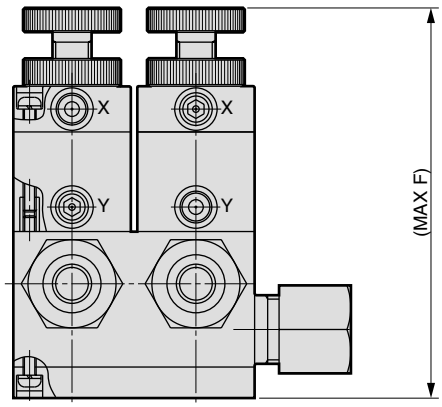

Model No.	F
AMG302	120
AMG402	149
AMG502	185

● With indicator
·AMG*02-*-6

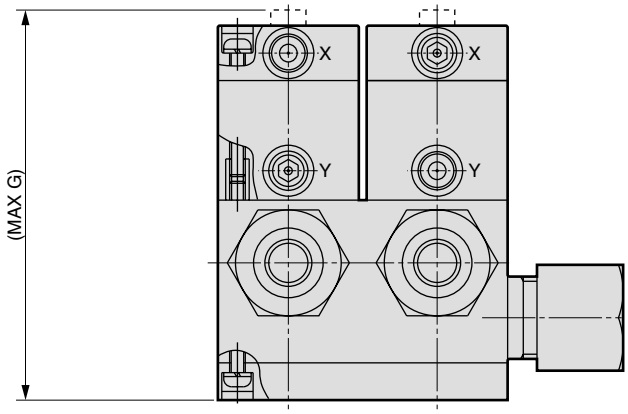

Model No.	G
AMG302	98
AMG402	129
AMG502	158

Air-operated valve for chemical liquids (manifold/branch valve)

GAMD$^{3}_{4}_{5}$*2 Series

- Orifice: GAMD3*2 Ø6 to Ø10
  GAMD4*2 Ø14.7 to Ø16
  GAMD5*2 Ø20
- No. of stations: 1 to 5 stations

Subject to Export Trade Control Ordinances

*Target: GAMD4*2 and 5*2 only

Specifications

Descriptions		GAMD3*2	GAMD4*2	GAMD5*2
Working fluid		Chemical liquids, pure water (Note 1)		
Fluid temperature	˚C	5 to 90 (5 to 160) (Note 5)		5 to 90 (Note 5)
Withstanding pressure	MPa	0.9		
Working pressure range (A → B)	MPa	0 to 0.3 (Note 4)		
Working pressure range (B → A)	MPa	0 to 0.1 (Note 4)		
Valve seat leakage	cm³/min	0 (at, water pressure)		
Back pressure	MPa	0 to 0.1 (Note 4)		
Ambient temperature	˚C	0 to 60		
Frequency		30 times/min or less	20 times/min or less	
Installation attitude		Free		
Connection		ODØ10, Ø12 tube connection (fitting integrated type) OD3/8", 1/2 tube connection (fitting integrated type)	OD3/4" tube connection (fitting integrated type)	ODØ25 tube connection (fitting integrated type) OD1" tube connection (fitting integrated type)
Orifice		Ø6 to Ø10 (Note 3)	Ø14.7 to Ø16 (Note 3)	Ø20
Operation section	Operation pressure range MPa	NC/NO 0.3 to 0.5, double acting 0.3 to 0.4		
	Operation pressure connection port	Rc1/8 (Note 2)		

Note 1: Check the compatibility of the product's configuration materials, working fluid, and ambient atmosphere before use.
Note 2: Connect a resin fitting when connecting to the operation port.
(When using a metal fitting, select one with a reinforcement ring.)
Note 3: Confirm the orifice for each connection in the Model indication section.
Note 4: See page 56 for high-pressure specifications.
Note 5: 5 to 40 ˚C for hydrofluoric acids.

 ⚠ Read the precautions on pages 7 to 12 in the introduction before use.

Internal structure and parts list

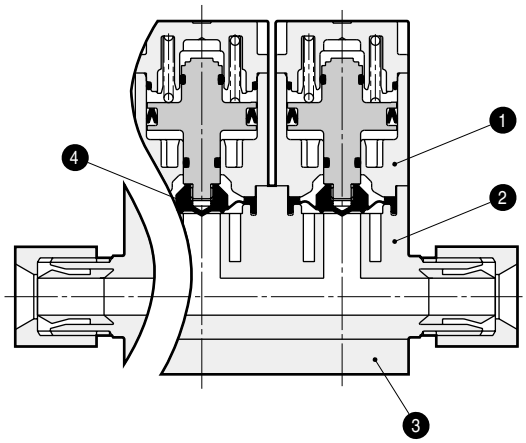

No.	Parts name	Material
1	Actuator assembly	PPS
2	Body	PTFE
3	Mounting plate	PP
4	Diaphragm	PTFE

The material differs with the model. Contact CKD for details.

How to order

● GAMD3*2 Series (Connection: Ø10, 3/8" tube)

GAMD3 (1) 2 - (10BUS) - (1) - (3) (M) (L)

- Model No.
- Ⓐ Actuation
- Ⓑ Connection
- Ⓒ Option
- Ⓓ No. of stations
- Ⓔ Fluid
- Ⓕ Port A position

		Ⓑ Connection												
		10US	10BUS	10UJ	10BUJ	10UP	10BUP	10UA	10BUA	10UR	10BUR	10UK	10BUK	10BUW
		Super type Pillar fitting integrated type		Super 300 type Pillar fitting J series integrated type		Super 300 type Pillar fitting P series integrated type		F-LOCK 20A series fitting integrated type		F-LOCK 60 series fitting integrated type		Final lock fitting integrated type		FLARTEC fitting integrated type
		Ø10 X Ø8 tube connection	3/8" X 1/4" tube connection	Ø10 X Ø8 tube connection	3/8" X 1/4" tube connection	Ø10 X Ø8 tube connection	3/8" X 1/4" tube connection	Ø10 X Ø8 tube connection	3/8" X 1/4" tube connection	Ø10 X Ø8 tube connection	3/8" X 1/4" tube connection	Ø10 X Ø8 tube connection	3/8" X 1/4" tube connection	3/8" X 1/4" tube connection
Symbol	Descriptions / Orifice	Ø8		Ø8		Ø8		Ø8		Ø7	Ø6	Ø8		Ø6.3
Ⓐ Actuation														
1	NC (normally closed)	●	●	●	●	●	●	●	●	●	●	●	●	●
2	NO (normally open)	●	●	●	●	●	●	●	●	●	●	●	●	●
3	Double acting	●	●	●	●	●	●	●	●	●	●	●	●	●
Ⓒ Option														
0	ON/OFF only	●	●	●	●	●	●	●	●	●	●	●	●	●
1	With flow adjustment	●	●	●	●	●	●	●	●	●	●	●	●	●
6	With indicator	●	●	●	●	●	●	●	●	●	●	●	●	●
Ⓓ No. of stations														
1 to 5	1 station to 5 stations	●	●	●	●	●	●	●	●	●	●	●	●	●
Ⓔ Fluid														
Blank	Standard	●	●	●	●	●	●	●	●	●	●	● (Note 1)	● (Note 1)	●
M	For ammonia	●	●	●	●	●	●	●	●	●	●	● (Note 1)	● (Note 1)	●
P	For nitric acid, for hydrofluoric acid (Note 3)	●	●	●	●	●	●	●	●	●	●	● (Note 1)	● (Note 1)	●
Y	For high temperature (5 to 160˚C) (Note 2)	●	●	●	●	●	●	●	●			● (Note 1)	● (Note 1)	
Ⓕ Port A position														
Blank	Right	●	●	●	●	●	●	●	●	●	●	●	●	●
L	Left	●	●	●	●	●	●	●	●	●	●	●	●	●
W	Both sides	●	●	●	●	●	●	●	●	●	●	●	●	●

Available with PTFE machined body.

● Model No. for type with coated metal section

GAMD3 (A) 2 - (B) - (C) - (D) (E) (F) C

- Coated

● Model No. with operation port reinforcement ring (Designate R at end of Model No.)

GAMD3 (A) 2 - (B) - (C) - (D) (E) (F) R

- With reinforcement ring

● Model No. for type with coated metal section + operation port reinforcement ring

GAMD3 (A) 2 - (B) - (C) - (D) (E) (F) C R

- Coated
- With reinforcement ring

⚠ Note on model No. selection

Note 1: The final lock fitting nut and operation air piping could interfere, so check dimensions before selecting.

Note 2: This valve is not compatible with nitric acid, hydrofluoric acid, or chlorine.

Note 3: C (with coated metal section) is included in the Ⓔ Fluid P item.

How to order

● GAMD3*2 Series (Connection: Ø12, 1/2" tube)

GAMD3 (1) 2 - (12US) - (1) - (3) (M) (W)

- Model No.
- (A) Actuation
- (B) Connection
- (C) Option
- (D) No. of stations
- (E) Fluid
- (F) Port A position

		(B) Connection												
		12US	15BUS	12UJ	15BUJ	12UP	15BUP	12UA	15BUA	12UR	15BUR	12UK	15BUK	15BUW
		Super type Pillar fitting integrated type		Super 300 type Pillar fitting J series integrated type		Super 300 type Pillar fitting P series integrated type		F-LOCK 20A series fitting integrated type		F-LOCK 60 series fitting integrated type		Final lock fitting integrated type		FLARTEC fitting integrated type
		Ø12 X Ø10 tube connection	1/2" X 3/8" tube connection	Ø12 X Ø10 tube connection	1/2" X 3/8" tube connection	Ø12 X Ø10 tube connection	1/2" X 3/8" tube connection	Ø12 X Ø10 tube connection	1/2" X 3/8" tube connection	Ø12 X Ø10 tube connection	1/2" X 3/8" tube connection	Ø12 X Ø10 tube connection	1/2" X 3/8" tube connection	1/2" X 3/8" tube connection
Symbol	Descriptions / Orifice	Ø10		Ø10		Ø10		Ø10		Ø9		Ø10		Ø9.4
(A) Actuation														
1	NC (normally closed)	●	●	●	●	●	●	●	●	●	●	●	●	●
2	NO (normally open)	●	●	●	●	●	●	●	●	●	●	●	●	●
3	Double acting	●	●	●	●	●	●	●	●	●	●	●	●	●
(C) Option														
0	ON/OFF only	●	●	●	●	●	●	●	●	●	●	●	●	●
1	With flow adjustment	●	●	●	●	●	●	●	●	●	●	●	●	●
6	With indicator	●	●	●	●	●	●	●	●	●	●	●	●	●
(D) No. of stations														
1 to 5	1 station to 5 stations	●	●	●	●	●	●	●	●	●	●	●	●	●
(E) Fluid														
Blank	Standard	●	●	●	●	●	●	●	●	●	●	● (Note 1)	● (Note 1)	●
M	For ammonia	●	●	●	●	●	●	●	●	●	●	● (Note 1)	● (Note 1)	●
P	For nitric acid, for hydrofluoric acid (Note 3)	●	●	●	●	●	●	●	●	●	●	● (Note 1)	● (Note 1)	●
Y	For high temperature (5 to 160˚C) (Note 2)	●	●	●	●	●	●	●	●			● (Note 1)	● (Note 1)	
(F) Port A position														
Blank	Right	●	●	●	●	●	●	●	●	●	●	●	●	●
L	Left	●	●	●	●	●	●	●	●	●	●	●	●	●
W	Both sides	●	●	●	●	●	●	●	●	●	●	●	●	●

Available with PTFE machined body.

● Model No. for type with coated metal section

GAMD3 (A) 2 - (B) - (C) - (D) (E) (F) C

- Coated

● Model No. with operation port reinforcement ring (Designate R at end of Model No.)

GAMD3 (A) 2 - (B) - (C) - (D) (E) (F) R

- With reinforcement ring

● Model No. for type with coated metal section + operation port reinforcement ring

GAMD3 (A) 2 - (B) - (C) - (D) (E) (F) C R

- Coated
- With reinforcement ring

⚠ Note on model No. selection

Note 1: The final lock fitting nut and operation air piping could interfere, so check dimensions before selecting.
Note 2: This valve is not compatible with nitric acid, hydrofluoric acid, or chlorine.
Note 3: C (with coated metal section) is included in the (E) Fluid P item.

GAMD4*2Series

How to order

● GAMD4*2 Series

GAMD4 (1) 2 - (20BUS) - (6) - (2) (M) (L)

- Model No.
- (A) Actuation
- (B) Connection
- (C) Option
- (D) No. of stations
- (E) Fluid
- (F) Port A position

Symbol	Descriptions / Orifice	(B) Connection 20BUS Super type Pillar fitting integrated type	20BUJ Super 300 type Pillar fitting J series integrated type	20BUP Super 300 type Pillar fitting P series integrated type	20BUA F-LOCK 20A series fitting integrated type	20BUR F-LOCK 60 series fitting integrated type	20BUK Final lock fitting integrated type	20BUW FLARTEC fitting integrated type
		3/4" X 5/8" tube connection						
	Orifice	Ø16	Ø16	Ø16	Ø16	Ø15	Ø16	Ø14.7
(A) Actuation								
1	NC (normally closed)	●	●	●	●	●	●	●
2	NO (normally open)	●	●	●	●	●	●	●
3	Double acting	●	●	●	●	●	●	●
(C) Option								
0	ON/OFF only	●	●	●	●	●	●	●
1	With flow adjustment	●	●	●	●	●	●	●
6	With indicator	●	●	●	●	●	●	●
(D) No. of stations								
1 to 5	1 station to 5 stations	●	●	●	●	●	●	●
(E) Fluid								
Blank	Standard	●	●	●	●	●	●	●
M	For ammonia	●	●	●	●	●	●	●
P	For nitric acid, for hydrofluoric acid (Note 2)	●	●	●	●	●	●	●
Y	For high temperature (5 to 160˚C) (Note 1)	●	●	●	●		●	
(F) Port A position								
Blank	Right	●	●	●	●	●	●	●
L	Left	●	●	●	●	●	●	●
W	Both sides	●	●	●	●	●	●	●

Available with PTFE machined body.

● Model No. for type with coated metal section

GAMD4 (A) 2 - (B) - (C) - (D) (E) (F) C

- Coated

● Model No. with operation port reinforcement ring (Designate R at end of Model No.)

GAMD4 (A) 2 - (B) - (C) - (D) (E) (F) R

- With reinforcement ring

● Model No. for type with coated metal section + operation port reinforcement ring

GAMD4 (A) 2 - (B) - (C) - (D) (E) (F) C R

- Coated
- With reinforcement ring

⚠ Note on model No. selection

Note 1: This valve is not compatible with nitric acid, hydrofluoric acid, or chlorine.

Note 2: C (with coated metal section) is included in the (E) Fluid P item.

How to order

● GAMD5*2 Series

GAMD5 (1) 2 - (25US) - (1) - (3) (P) (W)

- Model No.
- (A) Actuation
- (B) Connection
- (C) Option
- (D) No. of stations
- (E) Fluid
- (F) Port A position

		(B) Connection											
		25US	25BUS	25UJ	25BUJ	25UP	25BUP	25BUA	25UR	25BUR	25UK	25BUK	25BUW
		Super type Pillar fitting integrated type		Super 300 type Pillar fitting J series integrated type		Super 300 type Pillar fitting P series integrated type		F-LOCK 20A series fitting integrated type	F-LOCK 60 series fitting integrated type		Final lock fitting integrated type		FLARTEC fitting integrated type
		Ø25 X Ø22 tube connection	1" X 7/8" tube connection	Ø25 X Ø22 tube connection	1" X 7/8" tube connection	Ø25 X Ø22 tube connection	1" X 7/8" tube connection	1" X 7/8" tube connection (Note 2)	Ø25 X Ø22 tube connection	1" X 7/8" tube connection	Ø25 X Ø22 tube connection	1" X 7/8" tube connection	1" X 7/8" tube connection
Symbol	Descriptions / Orifice	Ø20		Ø20		Ø20		Ø20	Ø20		Ø20		Ø20
(A) Actuation													
1	NC (normally closed)	●	●	●	●	●	●	●	●	●	●	●	●
2	NO (normally open)	●	●	●	●	●	●	●	●	●	●	●	●
3	Double acting	●	●	●	●	●	●	●	●	●	●	●	●
(C) Option													
0	ON/OFF only	●	●	●	●	●	●	●	●	●	●	●	●
1	With flow adjustment	●	●	●	●	●	●	●	●	●	●	●	●
6	With indicator	●	●	●	●	●	●	●	●	●	●	●	●
(D) No. of stations													
1 to 4	1 station to 4 stations	●	●	●	●	●	●	●	●	●	●	●	●
(E) Fluid													
Blank	Standard	●	●	●	●	●	●	●	●	●	●	●	●
M	For ammonia	●	●	●	●	●	●	●	●	●	●	●	●
P	For nitric acid, for hydrofluoric acid (Note 1)	●	●	●	●	●	●	●	●	●	●	●	●
(F) Port A position													
Blank	Right	●	●	●	●	●	●	●	●	●	●	●	●
L	Left	●	●	●	●	●	●	●	●	●	●	●	●
W	Both sides	●	●	●	●	●	●	●	●	●	●	●	●

Available with PTFE machined body.

● Model No. for type with coated metal section

GAMD5 (A) 2 - (B) - (C) - (D) (E) (F) C

- Coated

● Model No. with operation port reinforcement ring (Designate R at end of Model No.)

GAMD5 (A) 2 - (B) - (C) - (D) (E) (F) R

- With reinforcement ring

● Model No. for type with coated metal section + operation port reinforcement ring

GAMD5 (A) 2 - (B) - (C) - (D) (E) (F) C R

- Coated
- With reinforcement ring

⚠ Note on model No. selection

Note 1: C (with coated metal section) is included in the (E) Fluid P item.
Note 2: Also usable for the Ø25 x Ø22 diameter tube connection.

Dimensions

● Standard type

·GAMD3*2-*1
·GAMD4*2-*1
·GAMD5*2-*1

Port A position: Blank

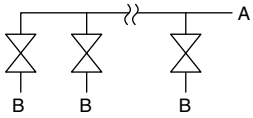

Port A position: L

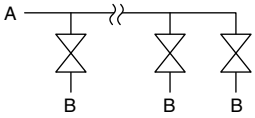

Port A position: W

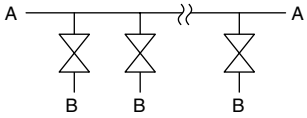

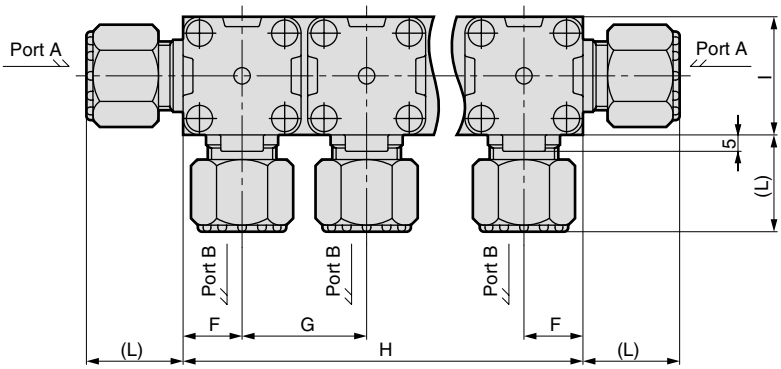

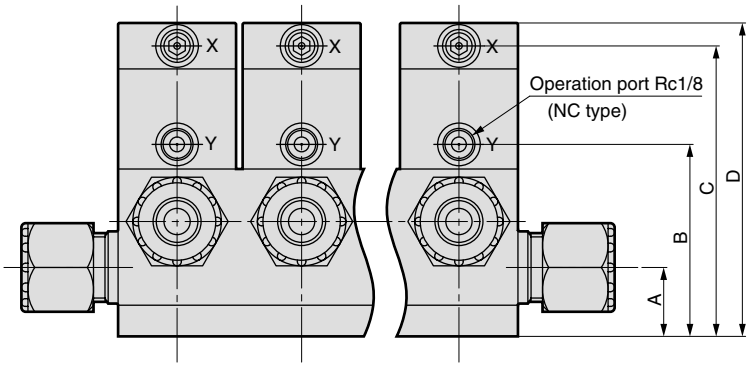

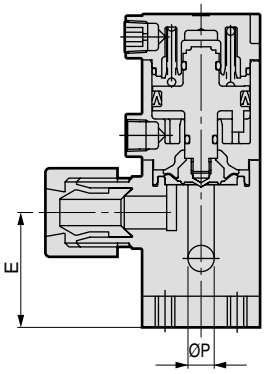

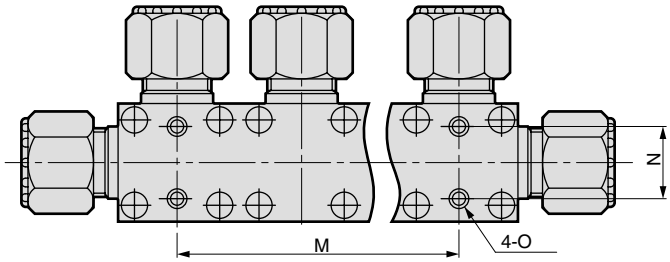

Dimensions

No. of stations	Model No.	A	B	C	D	E	F	G	H	I	M	N	O
1	GAMD3*2	21	59	89	96	35	18	38	36	36	-	22±0.3	M6 depth 9
	GAMD4*2	27	79	116	125	46	23	48	46	46	-	28±0.3	M8 depth 10
	GAMD5*2	35	101	143	153	60	30	62	60	60	-	40±0.3	M8 depth 13
2	GAMD3*2	21	59	89	96	35	18	38	74	36	38±0.3	22±0.3	M6 depth 9
	GAMD4*2	27	79	116	125	46	23	48	94	46	48±0.4	28±0.3	M8 depth 10
	GAMD5*2	35	101	143	153	60	30	62	122	60	62±0.4	40±0.3	M8 depth 13
3	GAMD3*2	21	59	89	96	35	18	38	112	36	76±0.4	22±0.3	M6 depth 9
	GAMD4*2	27	79	116	125	46	23	48	142	46	96±0.5	28±0.3	M8 depth 10
	GAMD5*2	35	101	143	153	60	30	62	184	60	124±0.5	40±0.3	M8 depth 13
4	GAMD3*2	21	59	89	96	35	18	38	150	36	114±0.5	22±0.3	M6 depth 9
	GAMD4*2	27	79	116	125	46	23	48	190	46	144±0.5	28±0.3	M8 depth 10
	GAMD5*2	35	101	143	153	60	30	62	246	60	186±0.7	40±0.3	M8 depth 13
5	GAMD3*2	21	59	89	96	35	18	38	188	36	152±0.7	22±0.3	M6 depth 9
	GAMD4*2	27	79	116	125	46	23	48	238	46	192±0.7	28±0.3	M8 depth 10

GAMD3*2 (10mm·3/8 ")

*1 (Connection model No.)	L	P
10US	25	8
10BUS	25	8
10UJ	23	8
10BUJ	23	8
10UP	25	8
10BUP	25	8
10UA	21	8
10BUA	21	8
10UR	37	7
10BUR	39	6
10UK	30	8
10BUK	30	8
10BUW	32.5	6.3

GAMD3*2 (12mm·1/2 ")

*1 (Connection model No.)	L	P
12US	29.5	10
15BUS	29.5	10
12UJ	27	10
15BUJ	27	10
12UP	29	10
15BUP	29	10
12UA	25	10
15BUA	25	10
12UR	37	9
15BUR	39	9
12UK	33	10
15BUK	33	10
15BUW	33.5	9.4

GAMD4*2

*1 (Connection model No.)	L	P
20BUS	39	16
20BUJ	34	16
20BUP	36	16
20BUA	31	16
20BUR	44	15
20BUK	36.5	16
20BUW	38	14.7

GAMD5*2

*1 (Connection model No.)	L	P
25US	43.5	20
25BUS	43.5	20
25UJ	41	20
25BUJ	41	20
25UP	43	20
25BUP	43	20
25BUA	40	20
25UR	49.5	20
25BUR	51	20
25UK	40.5	20
25BUK	40.5	20
25BUW	48	20

● With flow adjustment
·GAMD**2-*-1

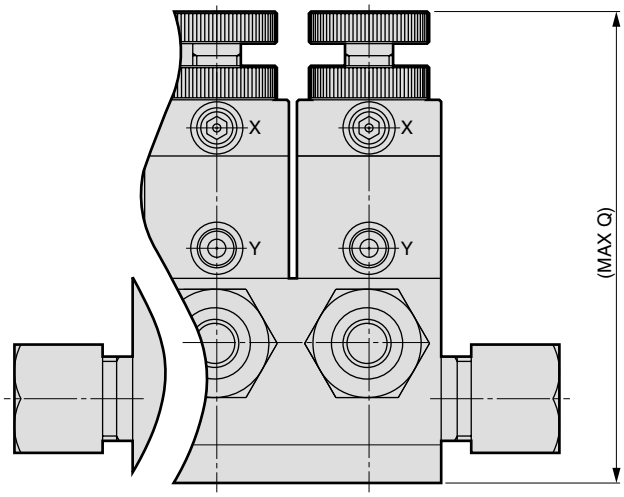

Model No.	Q
GAMD3*2	120
GAMD4*2	149
GAMD5*2	185

● With indicator
·GAMD**2-*-6

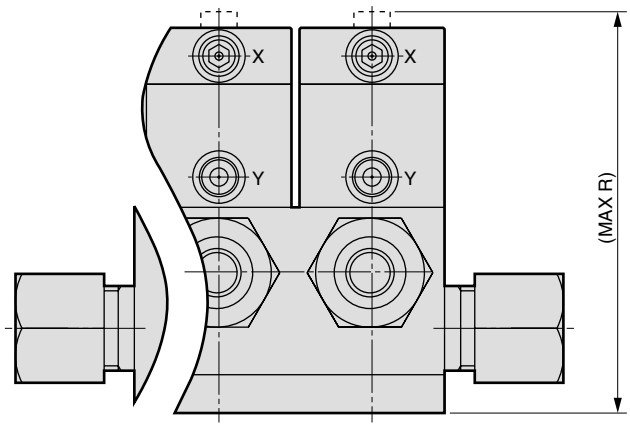

Model No.	R
GAMD3*2	98
GAMD4*2	129
GAMD5*2	158

Air-operated valve for chemical liquids

High-pressure specifications

AMD$^{3}_{4}_{5}$*2 / AMG$^{3}_{4}_{5}$02 / GAMD$^{3}_{4}_{5}$*2 Series

Descriptions \ Pressure specifications		B	Q
Fluid temperature	˚C	5 to 90	
Working pressure range	MPa	A → B, B → A: 0 to 0.3 (Note 2)	A → B, B → A: 0 to 0.4
Back pressure	MPa	0 to 0.3 (Note 2)	0 to 0.4
Operation pressure range	MPa	NC/NO: 0.4 to 0.5, double acting: 0.35 to 0.4	NC/NO: 0.5 to 0.6, double acting: 0.4 to 0.5

Note 1: Other specifications and external dimensions are the same as the standard type. Note that the fluid temperature is 5 to 90 ˚C.
Note 2: Fluid pressure range is usable within the range shown in Fig. 1.
Back pressure is the same value as the fluid pressure range (B→ A).

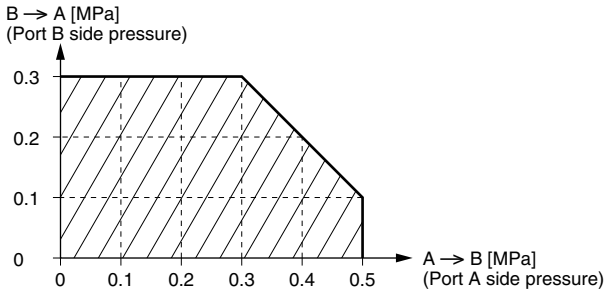

Fig. 1: Working fluid pressure range (B specifications)

How to order

AMD$^{3}_{4}_{5}$*2 series

AMD$^{3}_{4}_{5}$ 1 2 - 15BUS - 0 4 P B

- Ⓐ Actuation
- Ⓑ Connection
- Ⓒ Option
- Ⓓ Operation port direction
- Ⓔ Fluid
- Ⓕ High-pressure specifications

Ⓕ High-pressure specifications	
B	Double port 0.3MPa specifications
Q	Double port 0.4MPa specifications

⚠ Note on model No. selection

Note 1: Ⓐ to Ⓔ are the same as standard. See individual model pages for selection.
(AMD3*2: page 10, AMD4*2: page 20, AMD5*2: page 28)

Note 2: When combining with the type with a coated metal section (C), with operation port reinforcement ring (R), and base installation (X), designate the model as - Ⓒ Ⓓ Ⓔ CR Ⓕ X.

Note 3: If the Ⓕ item is Q, the type with a bypass cannot be used.

AMD$^{3}_{4}_{5}$*2 series (stainless steel body)

AMD$^{3}_{4}_{5}$ 1 2 - 8 - 0 - A - 4 B

- Ⓐ Actuation
- Ⓑ Connection
- Ⓒ Option
- Ⓓ Actuator material
- Ⓔ Operation port direction
- Ⓕ High-pressure specifications

Ⓕ High-pressure specifications	
B	Double port 0.3MPa specifications
Q	Double port 0.4MPa specifications

⚠ Note on model No. selection

Note 1: Ⓐ to Ⓔ are the same as the standard stainless steel body. See individual model pages for selection.
Note that if no symbol is indicated for Ⓓ , omit the preceding hyphen (-) when indicating the model.
(AMD3*2: page 16, AMD4*2: page 24, AMD5*2: page 32)

 ⚠ Read the precautions on pages 7 to 12 in the introduction before use.

How to order

AMG$^{3}_{4}$02 series

AMG$^{3}_{4}$02 - 15BUS - 1 - M L B

- Ⓐ Connection: 15BUS
- Ⓑ Option: 1
- Ⓒ Fluid: M
- Ⓓ Port A position: L
- Ⓔ High-pressure specifications: B

Ⓔ High-pressure specifications	
B	Double port 0.3MPa specifications
Q	Double port 0.4MPa specifications

Note on model No. selection

Note 1: Ⓐ to Ⓓ are the same as the standard stainless steel body. See pages 40 to 47 for selection.

Note 2: When combining with the type with coated metal section (C), and with operation port reinforcement ring (R), designate the model as - Ⓒ Ⓓ CR Ⓔ.

GAMD$^{3}_{4}$*2 series

GAMD$^{3}_{4}$ 1 2 - 15BUS - 1 - 2 M L B

- Ⓐ Actuation: 1
- Ⓑ Connection: 15BUS
- Ⓒ Option: 1
- Ⓓ No. of stations: 2
- Ⓔ Fluid: M
- Ⓕ Port A position: L
- Ⓖ High-pressure specifications: B

Ⓖ High-pressure specifications	
B	Double port 0.3MPa specifications
Q	Double port 0.4MPa specifications

Note on model No. selection

Note 1: Ⓐ to Ⓓ are the same as the standard stainless steel body. See pages 48 to 55 for selection.

Note 2: When combining with the type with coated metal section (C), and with operation port reinforcement ring (R), designate the model as - Ⓓ Ⓔ Ⓕ CR Ⓖ.

Air-operated valve for chemical liquids

AMD2$^{1}_{2}_{3}$ / AMD3$^{1}_{2}_{3}$ / AMD4$^{1}_{2}_{3}$ / AMD5$^{1}_{2}_{3}$ Series

Eliminating causes of particle formation with PFA-molded body

● Orifice: Ø8/Ø10/Ø12/Ø16/Ø20/Ø22/Ø25

CAD Subject to Export Trade Control Ordinances

*Target: Valves with Ø12 or larger orifice

Specifications

Descriptions		AMD2*-10-8	AMD3*-15-12		AMD4*-20-20		AMD5*-25-25	
Working fluid		Chemical liquids, pure water, N_2 gas, air						
Fluid temperature ˚C		5 to 60 (5 to 90) (5 to 150) (Note 3)						
Withstanding pressure MPa		1.4						
Working pressure range (A → B) MPa		0 to 0.5			0 to 0.4		0 to 0.3	
Working pressure range (B → A) MPa		0 to 0.3			0 to 0.2		0 to 0.2	
Valve seat leakage cm³/min		0 (at, water pressure)						
Back pressure MPa		0 to 0.3			0 to 0.2			
Ambient temperature ˚C		0 to 40						
Frequency		30 times/min or less			20 times/min or less			
Installation attitude		Free						
Port size (Note 1)		Rc3/8	Rc1/2		Rc3/4		Rc1	
Orifice		Ø8	Ø10	Ø12	Ø16	Ø20	Ø22	Ø25
Cv value		1.25	1.8	2.5	5.2	8	9.5	12
Operation section	Operation pressure MPa	NC/NO 0.3 to 0.5, double acting 0.2 to 0.3						
	Operation port	Rc1/8						

Note 1: The fitting integrated type is also available.
Note 2: See pages 72 and 73 for flow characteristics.
Note 3: 5 to 40 ˚C for hydrofluoric acids.

 ⚠ Read the precautions on pages 7 to 12 in the introduction before use.

Internal structure and parts list

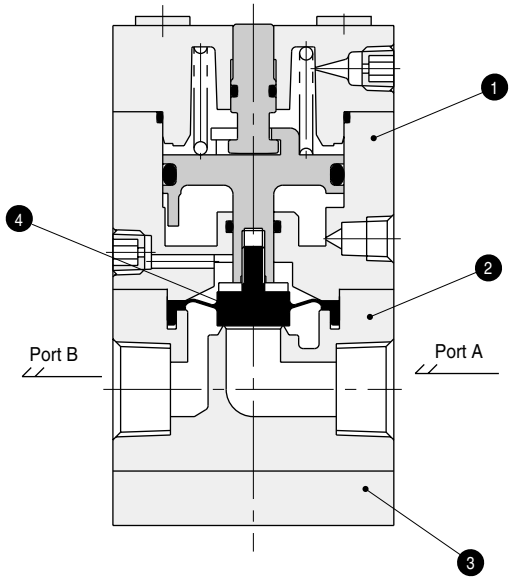

No.	Parts name	Material	Quantity
1	Actuator assembly	CPVC	1
2	Body	PFA	1
3	Mounting plate	CPVC	1
4	Diaphragm	PTFE	1

The material differs with the model. Contact CKD for details.

How to order

● AMD2 Series

AMD2 (1) - (10) - 8 - (1) (F)

Model No. | Orifice

Ⓐ Actuation | Ⓑ Connection | Ⓒ Option | Ⓓ Fluid

Ⓑ Connection							
10	10US	10BUS	10UF	10BUF	10UA	10BUA
Rc 3/8	Super type Pillar fitting integrated type		F-LOCK 20 series fitting integrated type		F-LOCK 20A series fitting integrated type	
	Ø10 X Ø8 tube connection	3/8" X 1/4" tube connection	Ø10 X Ø8 tube connection	3/8" X 1/4" tube connection	Ø10 X Ø8 tube connection	3/8" X 1/4" tube connection

Symbol	Descriptions \ Orifice	Ø8						
Ⓐ Actuation								
1	NC (normally closed)	●	●	●	●	●	●	●
2	NO (normally open)	●	●	●	●	●	●	●
3	Double acting	●	●	●	●	●	●	●
Ⓒ Option								
Blank	ON/OFF only	●	●	●	●	●	●	●
1	With flow adjustment	●	●	●	●	●	●	●
Ⓓ Fluid								
Blank	Standard	●	●	●	●	●	●	●
F	For medium temperature (5 to 90˚C) (Note 1)	●	●	●	●	●	●	●
M	For ammonia (Note 1)	●	●	●	●	●	●	●

⚠ Note on model No. selection

Note 1: Designate FM when selecting F and M.

How to order

● AMD3 Series

AMD3 (1) - (12US) - (10) - (1) (Y)

Model No.

Ⓐ Actuation
Ⓑ Connection
Ⓒ Orifice
Ⓓ Option
Ⓔ Fluid

Symbol	Descriptions	Ⓑ Connection 15 Rc 1/2	12US Super type Pillar fitting integrated type Ø12 X Ø10 tube connection	15BUS Super type Pillar fitting integrated type 1/2" X 3/8" tube connection	12UF F-LOCK 20 series fitting integrated type Ø12 X Ø10 tube connection	15BUF F-LOCK 20 series fitting integrated type 1/2" X 3/8" tube connection	12UA F-LOCK 20A series fitting integrated type Ø12 X Ø10 tube connection	15BUA F-LOCK 20A series fitting integrated type 1/2" X 3/8" tube connection
Ⓐ Actuation								
1	NC (normally closed)	●	●	●	●	●	●	●
2	NO (normally open)	●	●	●	●	●	●	●
3	Double acting	●	●	●	●	●	●	●
Ⓒ Orifice								
10	Ø10		●	●	●	●	●	●
12	Ø12	●						
Ⓓ Option								
Blank	ON/OFF only	●	●	●	●	●	●	●
1	With flow adjustment (Note 1)	●	●	●	●	●	●	●
2	With bypass (Note 1)	●	●	●	●	●	●	●
3	With flow adjustment and bypass (Note 1)	●	●	●	●	●	●	●
Ⓔ Fluid								
Blank	Standard	●	●	●	●	●	●	●
F	For medium temperature (5 to 90˚C)	●	●	●	●	●	●	●
Y	For high temperature (5 to 150˚C) (Nitric acid not permissible)	●	●	●	●	●	●	●
K	For high temperature (5 to 150˚C) (Sulfuric acid not permissible)	●	●	●	●	●	●	●
M	Liquid ammonia (Note 2)	●	●	●	●	●	●	●

⚠ Note on model No. selection

Note 1: The Ⓔ item fluid Y and K cannot be designated when using the type with flow rate adjustment and bypass.
Note 2: M can be designated with F (FM), but it cannot be selected with Y or K.

How to order

● AMD4 Series

AMD4 (1) - (20) - (20) - (1) (F)

Model No.

Ⓐ Actuation

Ⓑ Connection

Ⓒ Orifice

Ⓓ Option

Ⓔ Fluid

Symbol	Descriptions	Ⓑ Connection 20 Rc 3/4	20BUS Super type Pillar fitting integrated type (3/4" X 5/8" tube connection)	20BUF F-LOCK 20 series fitting integrated type (3/4" X 5/8" tube connection)	20BUA F-LOCK 20A series fitting integrated type (3/4" X 5/8" tube connection)
Ⓐ Actuation					
1	NC (normally closed)	●	●	●	●
2	NO (normally open)	●	●	●	●
3	Double acting	●	●	●	●
Ⓒ Orifice					
16	Ø16		●	●	●
20	Ø20	●			
Ⓓ Option					
Blank	ON/OFF only	●	●	●	●
1	With flow adjustment (Note 1)	●	●	●	●
2	With bypass (Note 1)	●	●	●	●
3	With flow adjustment and bypass (Note 1)	●	●	●	●
Ⓔ Fluid					
Blank	Standard	●	●	●	●
F	For medium temperature (5 to 90˚C)	●	●	●	●
Y	For high temperature (5 to 150˚C) (Nitric acid not permissible)	●	●	●	●
K	For high temperature (5 to 150˚C) (Sulfuric acid not permissible)	●	●	●	●
M	Liquid ammonia (Note 2)	●	●	●	●

⚠ Note on model No. selection

Note 1: The Ⓔ item fluid Y and K cannot be designated when using the type with flow rate adjustment and bypass.

Note 2: M can be designated with F (FM), but it cannot be selected with Y or K.

How to order

● AMD5 Series

AMD5 (2) - (25) - (25) - (1) (F)

Model No.

Ⓑ Connection

Ⓐ Actuation

Ⓒ Orifice

Ⓓ Option

Ⓔ Fluid

Symbol	Descriptions	Ⓑ Connection 25 Rc 1	25US Super type Pillar fitting integrated type Ø25 X Ø22 tube connection	25BUS Super type Pillar fitting integrated type 1" X 7/8" tube connection
Ⓐ Actuation				
1	NC (normally closed)	●	●	●
2	NO (normally open)	●	●	●
3	Double acting	●	●	●
Ⓒ Orifice				
22	Ø22		●	●
25	Ø25	●		
Ⓓ Option				
Blank	ON/OFF only	●	●	●
1	With flow adjustment (Note 1)	●	●	●
2	With bypass (Note 1)	●	●	●
3	With flow adjustment and bypass (Note 1)	●	●	●
Ⓔ Fluid				
Blank	Standard	●	●	●
F	For medium temperature (5 to 90˚C)	●	●	●
Y	For high temperature (5 to 150˚C) (Nitric acid not permissible)	●	●	●
K	For high temperature (5 to 150˚C) (Sulfuric acid not permissible)	●	●	●
M	Liquid ammonia (Note 2)	●	●	●

⚠ Note on model No. selection

Note 1: The Ⓔ item fluid Y and K cannot be designated when using the type with flow rate adjustment and bypass.
Note 2: M can be designated with F (FM), but it cannot be selected with Y or K.

Dimensions

● Rc screw type

·AMD2*
·AMD3*
·AMD4*
·AMD5*

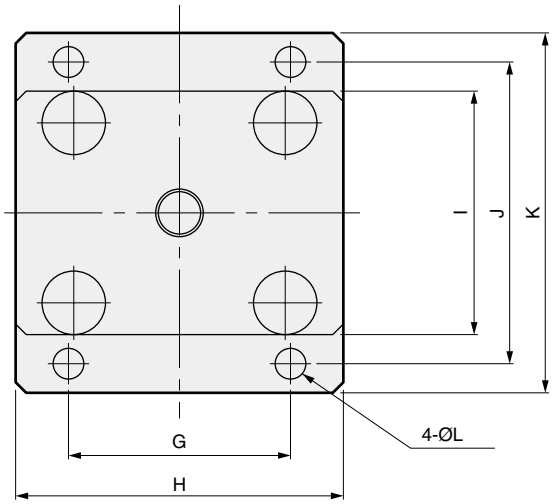

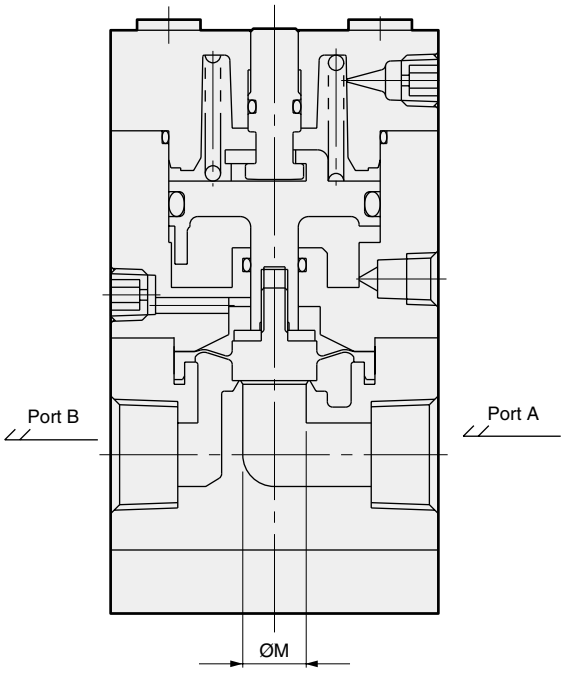

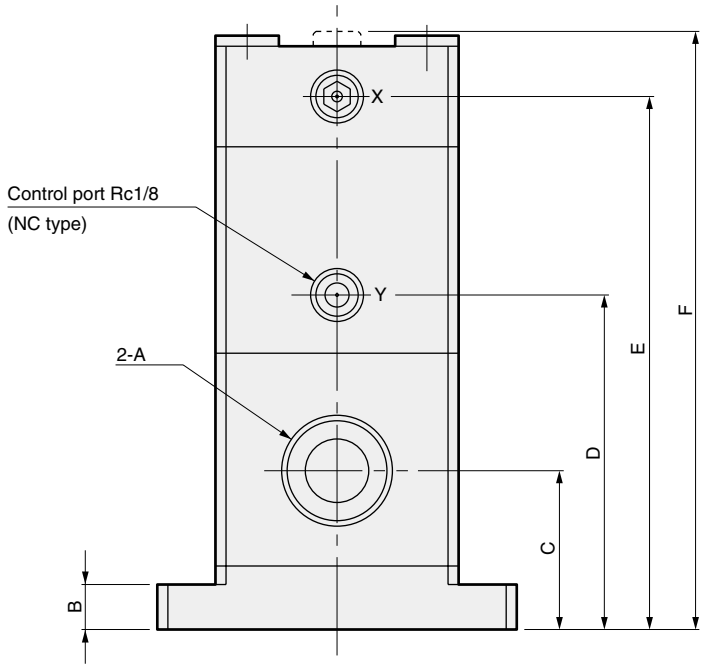

Symbol / Model No.	A	B	C	D	E	F	G	H	I	J	K	L	M
AMD2[*] -10-8	Rc3/8	7	22	48	80	MAX 90	34	44	36	46	56	5.8	8
AMD3[*]-15-12	Rc1/2	8	30	64	101	MAX 113	42	62	46	57	68	5.8	12
AMD4[*]-20-20	Rc3/4	8	34	71	116	MAX 133	56	80	58	71	84	6.8	20
AMD5[*]-25-25	Rc1	10	39	85	14	MAX 160	70	88	68	85	100	6.8	25

[*]Actuation

1	NC
2	NO
3	Double acting

Dimensions

● With low adjustment/with bypass

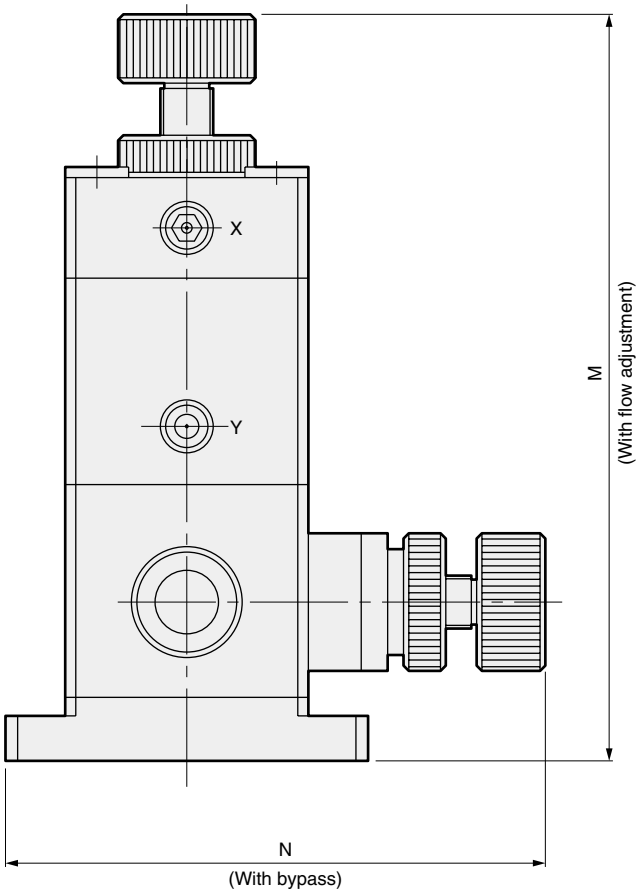

Symbol / Model No.	M	N
AMD2[*]-10-8-1	MAX 111	—
AMD3[*]-15-12-3	MAX 144	MAX 103
AMD4[*]-20-20-3	MAX 162	MAX 130
AMD5[*]-25-25-3	MAX 193	MAX 148

[*]Actuation

1	NC
2	NO
3	Double acting

Air-operated valve for chemical liquids

AMB Series

High corrosion resistance and long life

- Orifice: Ø2.3/Ø3.2/Ø4
  Ø6/Ø8/Ø10
  Ø12/Ø16/Ø20
  Ø25

Subject to Export Trade Control Ordinances

*Target: Valves with Ø12 or larger orifice and PTFE body material

Specifications

Descriptions		AMB0*-6-5	AMB1*-6-5	AMB2*-6-4	AMB2*-8-5	AMB3*-10-3	AMB3*-10-4	AMB3*-15-5	AMB4*-20-4	AMB4*-20-5	AMB5*-25-5
Working fluid		Chemical liquids (Note 1), pure water, N_2 gas, air									
Fluid temperature (Note 2) ˚C		5 to 60		5 to 90							
Withstanding pressure MPa		1		1.5							
Working pressure range (A → B) MPa		0 to 0.5				0 to 0.45			0 to 0.2		
Working pressure range (B → A) MPa		0 to 0.1	0 to 0.07	0 to 0.03							
Valve seat leakage cm³/min		0 (at, water pressure)									
Back pressure MPa		0 to 0.3		0 to 0.5		0 to 0.45			0 to 0.2		
Ambient temperature ˚C		0 to 60		0 to 40							
Frequency		30 times/min or less							20 times/min or less		15 times/min or less
Installation attitude		Free									
Connection		Rc1/8	Rc1/8	Rc1/8	Rc1/4	Rc3/8	Rc3/8	Rc1/2	Rc3/4	Rc3/4	Rc1
Orifice (Cv value)		Ø2.3 (0.12)	Ø3.2 (0.3)	Ø4 (0.36)	Ø6 (0.7)	Ø8 (1.5)	Ø10 (1.8)	Ø12 (2.5)	Ø16 (6)	Ø20 (7)	Ø25 (12)
Operation section	Operation pressure MPa	0.3 to 0.5									
	Operation port	M5		Rc1/8							

Note 1: Check the compatibility of the product's configuration materials and working fluid before use.
Note 2: 5 to 40 ˚C for material symbol "H".
5 to 120 ˚C for material symbols "S" and "E".
5 to 60 ˚C for material symbol "P".

Internal structure and parts list

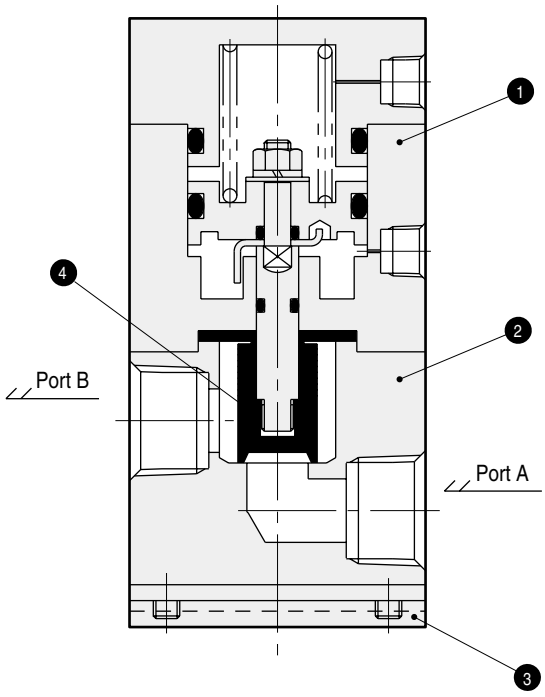

No.	Parts name	Material	Quantity
1	Actuator assembly	CPVC	1
2	Body	PTFE	1
3	Mounting plate	SUS	1
4	Bellows	PTFE	1

The material differs with the model. Contact CKD for details.

 ⚠ Read the precautions on pages 7 to 12 in the introduction before use.

How to order

AMB0 / AMB1 / AMB2 / AMB3 / AMB4 / AMB5 — 1 - 8 - 4 - P B1

- Series
- Ⓐ Actuation
- Ⓑ Connection
- Ⓒ Orifice
- Ⓓ Material (Note 1) (Note 2)
- Ⓔ Mounting plate

Symbol	Descriptions	AMB0	AMB1	AMB2		AMB3		AMB4	AMB5
Ⓑ Connection									
		6	6	6	8	10	15	20	25
		Rc 1/8	Rc 1/8	Rc 1/8	Rc 1/4	Rc 3/8	Rc 1/2	Rc 3/4	Rc 1
Ⓐ Actuation									
1	NC (normally closed)	●	●	●	●	●	●	●	●
2	NO (normally open)	●	●	●	●	●	●	●	●
3	Double acting	●	●	●	●	●	●	●	●
Ⓒ Orifice									
3	Refer to the right.					Ø8			
4	Refer to the right.			Ø4		Ø10		Ø16	
5	Refer to the right.	Ø2.3	Ø3.2		Ø6		Ø12	Ø20	Ø25

Ⓓ Material	Body	Actuator	Rod							
Blank	PTFE	CPVC	SUS304	●	●	●	●	●	●	●	●
H	PVC	CPVC	SUS304			●	●	●	●	●	●
S	SUS304	SUS304	SUS304			●	●	●	●	●	●
C	SUS304	CPVC	SUS304			●	●	●	●	●	●
E	SUS316	SUS316	SUS304			●	●	●	●	●	●
P	PTFE	CPVC	CPVC			●	●	●	●	●	●
F	PTFE	CPVC	PVDF			●	●	●	●	●	●
D	SUS316	CPVC	SUS303	●	●						

Ⓔ Mounting plate									
Blank	Side mounting plate (SUS304)	● (Note 5)	● (Note 6)	●	●	●	●	●	●
B1	Port end mounting plate (SUS304)			●	●	●	●	●	●
G	Corrosion proof + side mounting plate with no exposed metal sections (CPVC)			● (Note 6)	● (Note 6)	● (Note 6)	● (Note 6)	● (Note 6)	● (Note 6)
GB	Corrosion proof + port end mounting plate with no exposed metal sections (CPVC)			● (Note 6)	● (Note 6)	● (Note 6)	● (Note 6)	● (Note 6)	● (Note 6)

⚠ Note on model No. selection

Note 1: For material symbol P, the piston rod material in the actuator has been changed from SUS to CPVC.
Designate this type when using strong acids (hydrofluoric acid, hydrochloric acid, nitric acid, etc.) The working fluid temperature is 5 to 60˚C.
Note 2: For material symbol F, PVDF is used for the piston rod. This type is used with strong acids at fluid temperatures between 5 and 90 ˚C.
Note 3: Designate a model with material symbol S or E when using solvents such as acetone or trichloroethylene.
Note 4: Use the AMD type with option M when using ammonia.
Note 5: AMB0 and AMB1 are installed on the back. (See the external dimension drawings.)
Note 6: G and GB are used when no symbol or H is designated for Ⓓ Material symbol.
If P or F is designated for Ⓓ Material symbol, the G plate is attached with no symbol.
Designate PB or FB for a port end mounting plate with P or F.

Dimensions

● AMB0-6-5

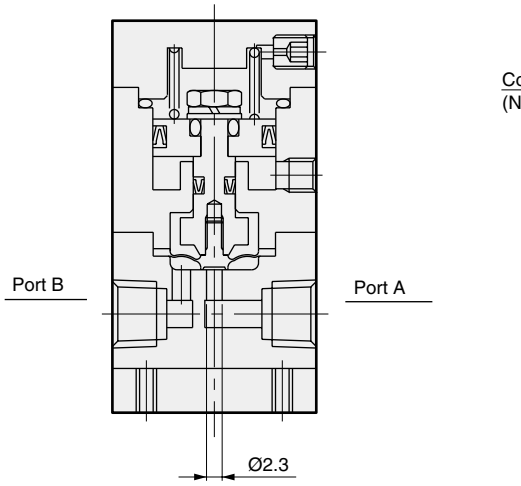

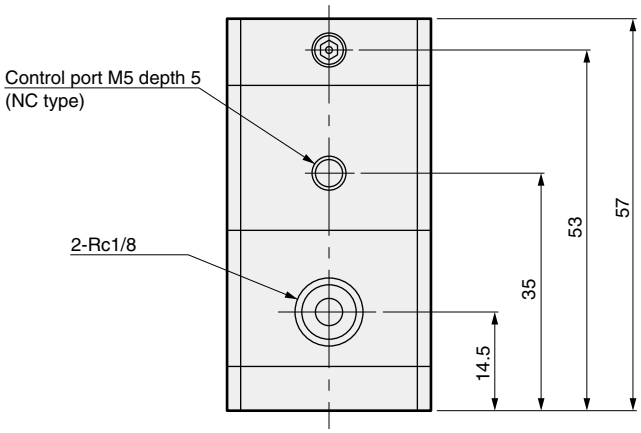

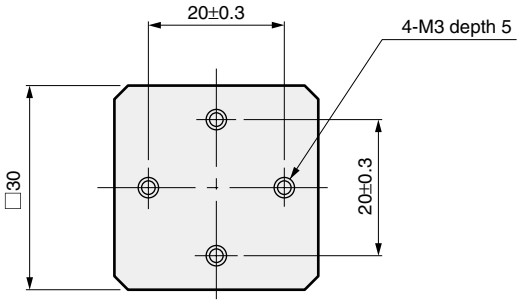

● AMB1-6-5

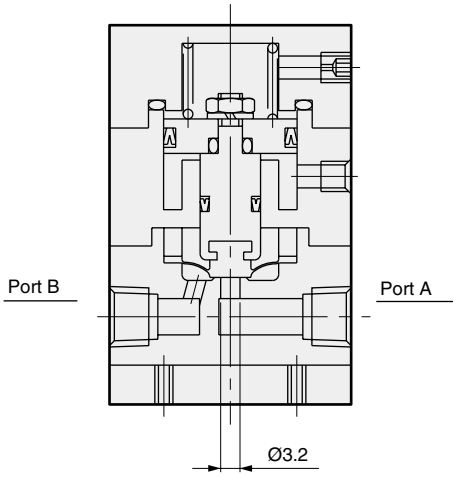

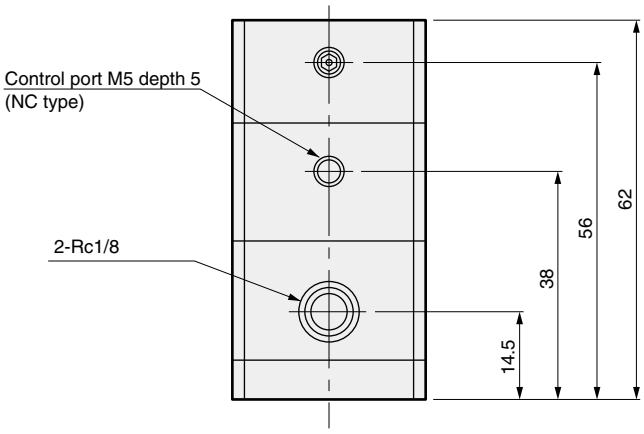

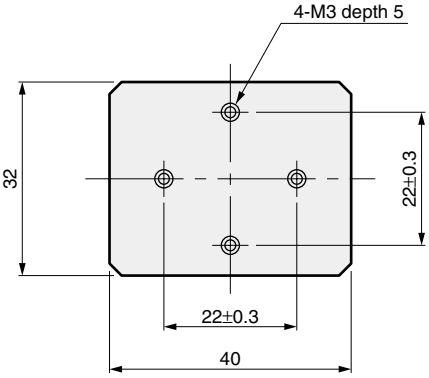

Dimensions

● AMB2 [*]
AMB3 [*]
AMB4 [*]
AMB5 [*]

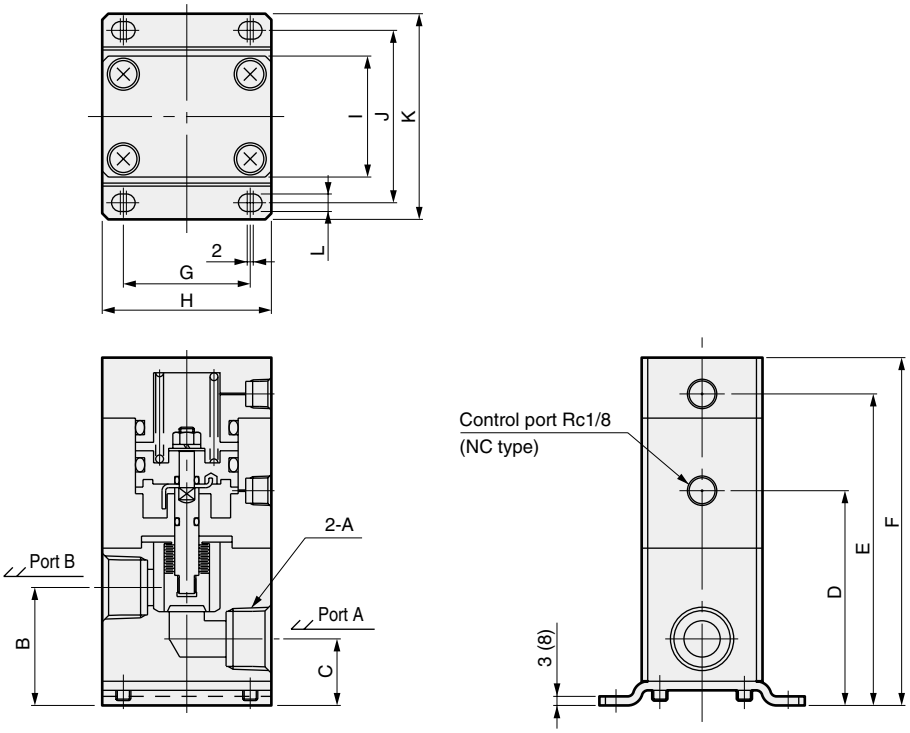

Symbol / Model No.	A	B	C	D	E	F	G	H	I	J	K	L
AMB2[*]-6-4	Rc1/8	28 (34)	18 (24)	53 (59)	89.5 (95.5)	99.5 (105.5)	34	46	36	50	62	4.5 (Ø4.8)
AMB2[*]-8-5	Rc1/4											
AMB3[*]-10-$^{3}_{4}$	Rc3/8	39 (45)	22 (28)	71 (77)	103 (109)	115 (121)	42	56	40	57	68	5.8 (Ø5.8)
AMB3[*]-15-5	Rc1/2											
AMB4[*]-20-$^{4}_{5}$	Rc3/4	52 (58)	26 (32)	93 (99)	133 (139)	149 (155)	56	72	53	73	85	5.8 (Ø5.8)
AMB5[*]-25-5	Rc1	62.5 (68.5)	31.5 (37.5)	109 (115)	154 (160)	174 (180)	66	84	63	87	99	5.8 (Ø5.8)

[*] Actuation

1	NC
2	NO
3	Double acting

Dimensions shown in parentheses apply to corrosion proof specifications with no exposed metal sections.
(The mounting plate material is CPVC, which differs in appearance from this drawing.)

● Port end mounting plate (B1)

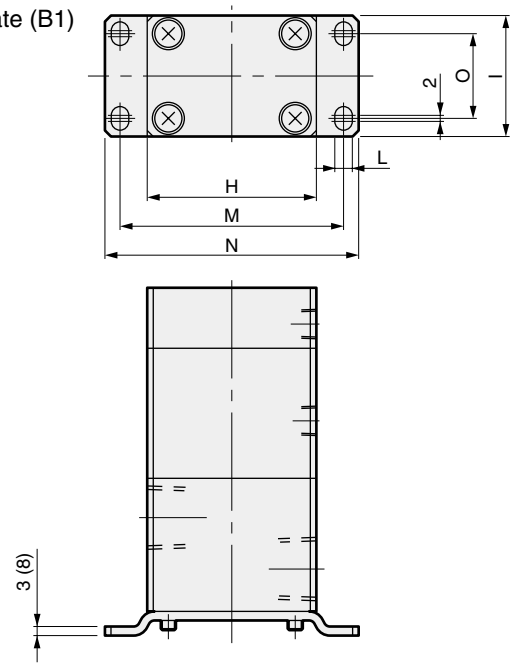

Symbol / Model No.	M	N	O
AMB2[*]-6-4-B1	64	72	26
AMB2[*]-8-5-B1			
AMB3[*]-10-$^{3\text{-}B1}_{4\text{-}B1}$	74	84	28
AMB3[*]-15-5-B1			
AMB4[*]-20-$^{4\text{-}B1}_{5\text{-}B1}$	92	104	38
AMB5[*]-25-5-B1	108	120	48

[*] Actuation

1	NC
2	NO
3	Double acting

Flow characteristics

● Flow characteristics (water)

Differential pressure - flow rate CV values shown in parentheses

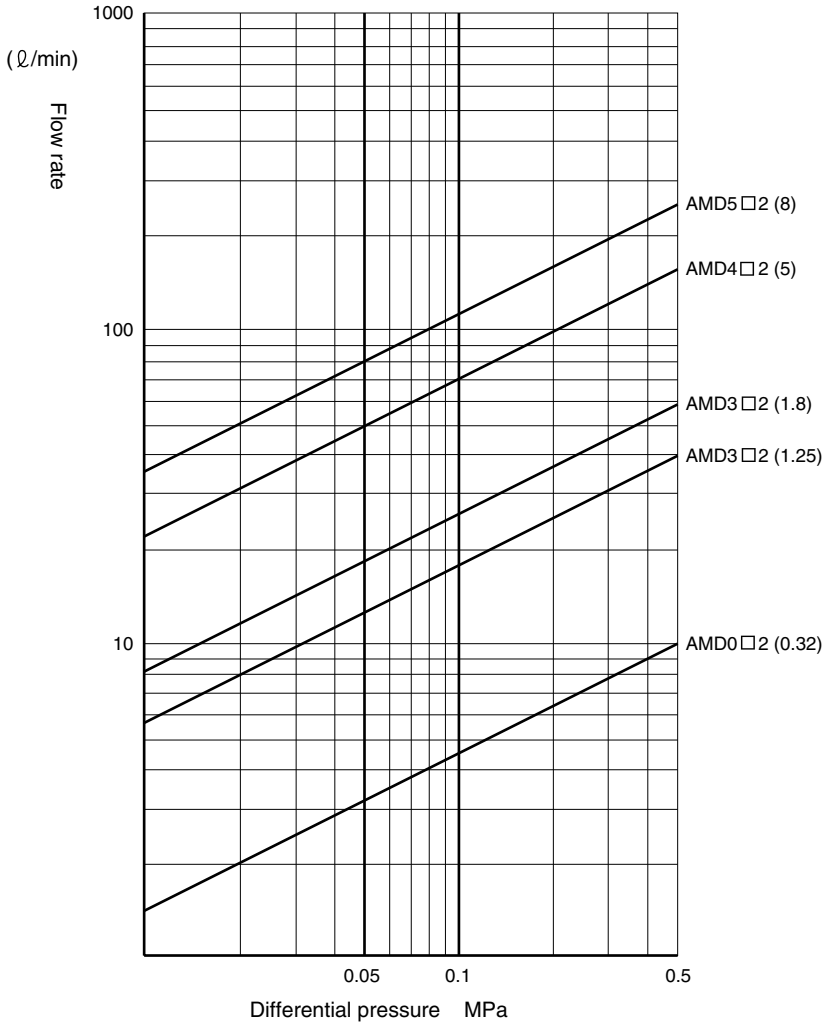

● Bypass section flow characteristics (water)

Differential pressure - flow rate CV values shown in parentheses

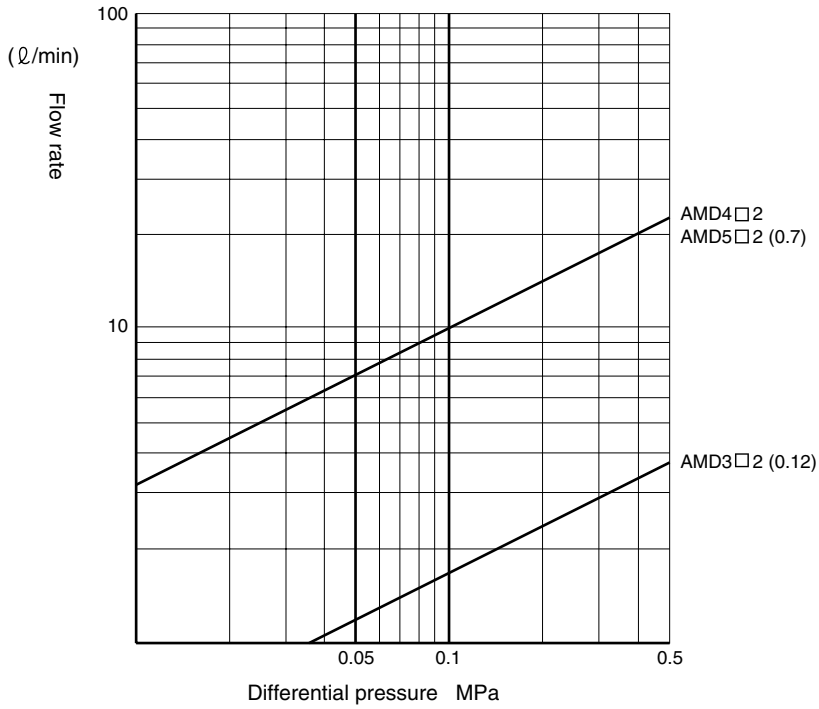

Flow characteristics

● With flow adjustment (water)

No. of turns - flow rate

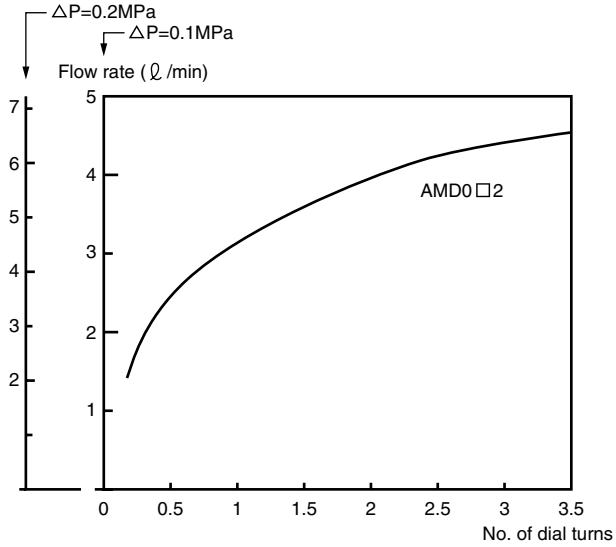

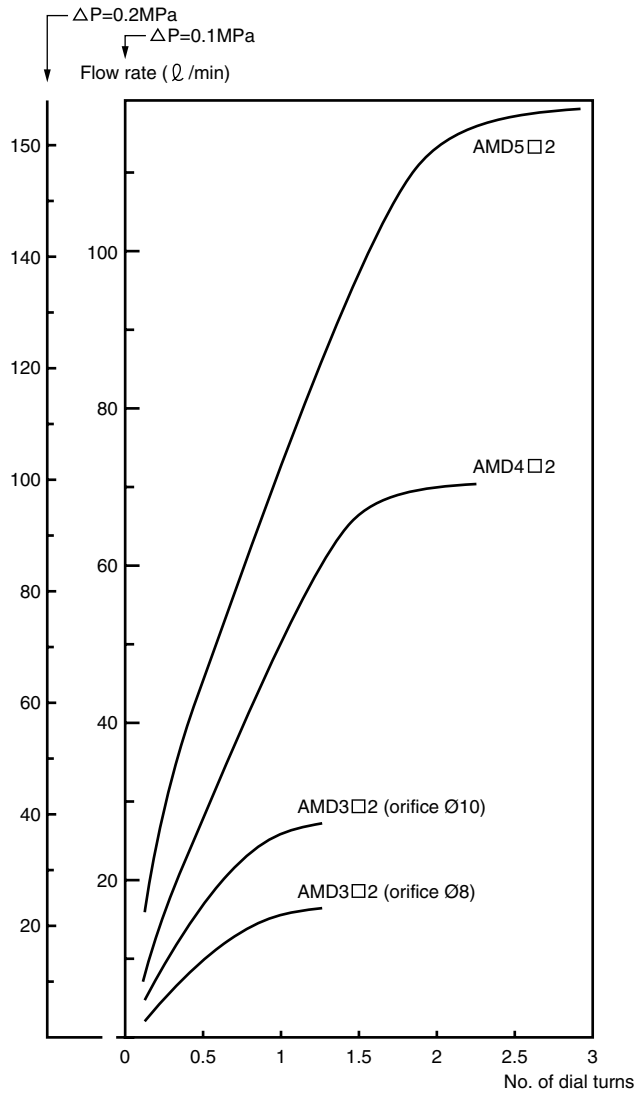

Note 1: Set the adjustment dial so that it opens at least 1/4 turn from fully closed. If closed further, vibration or flow fluctuation, etc., may occur, depending on working conditions.

● With bypass (water)

No. of turns - flow rate

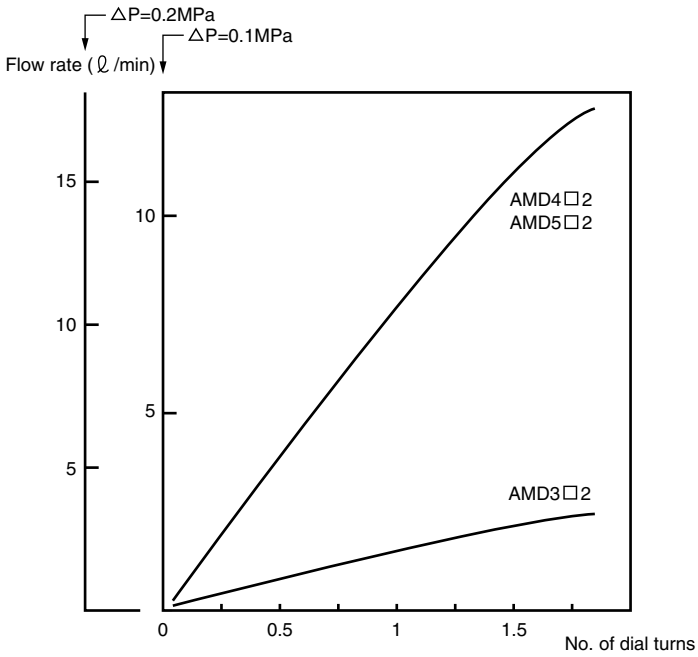

Flow characteristics

● Flow characteristics (water)

Differential pressure - flow rate CV values shown in parentheses

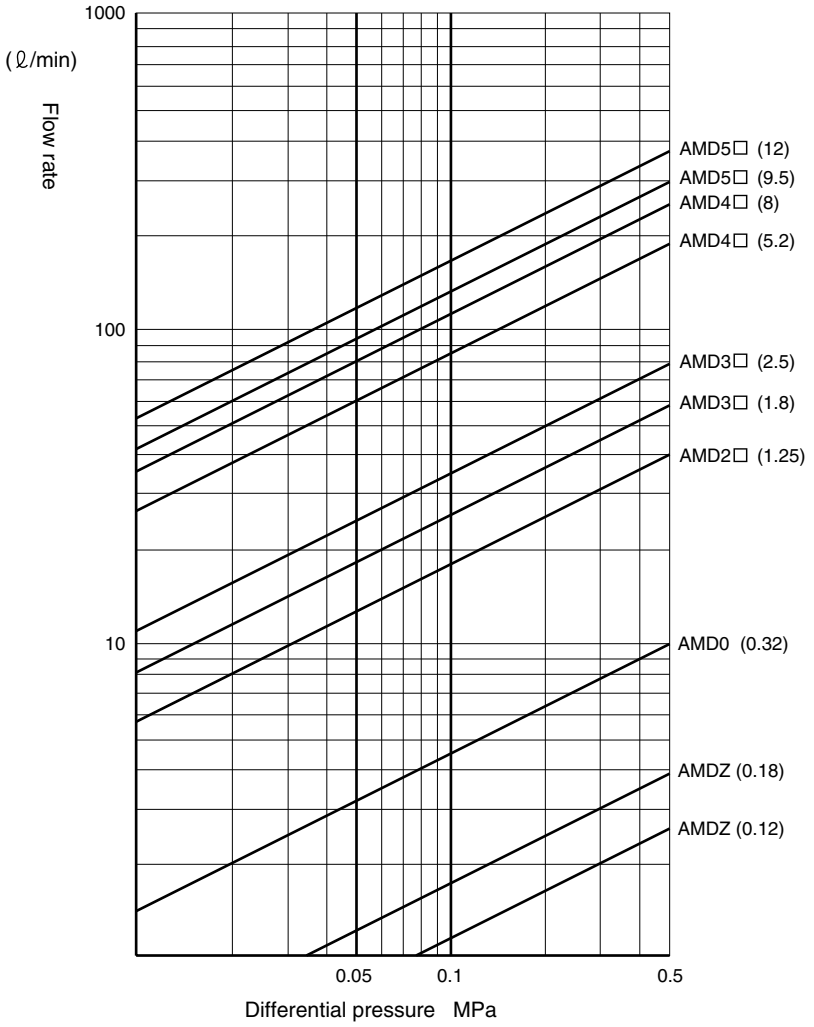

● Bypass section flow characteristics (water)

Differential pressure - flow rate CV values shown in parentheses

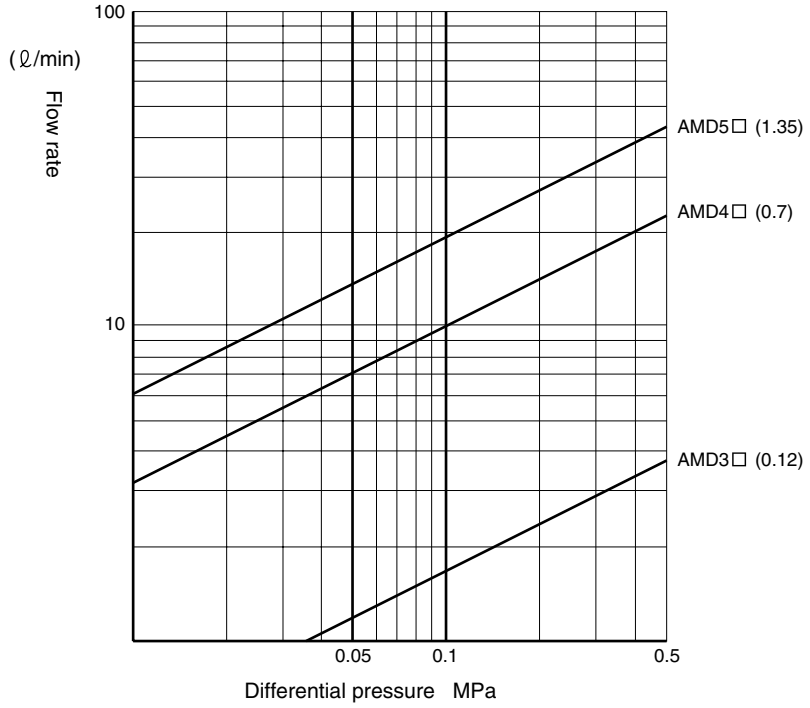

Flow characteristics

● With flow adjustment (water)

No. of turns - flow rate

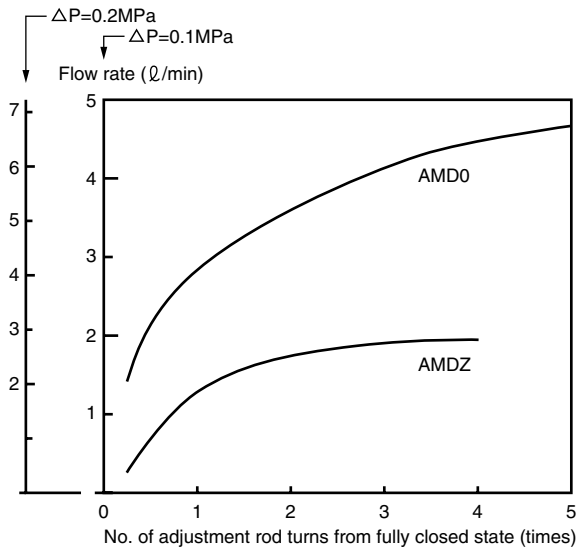

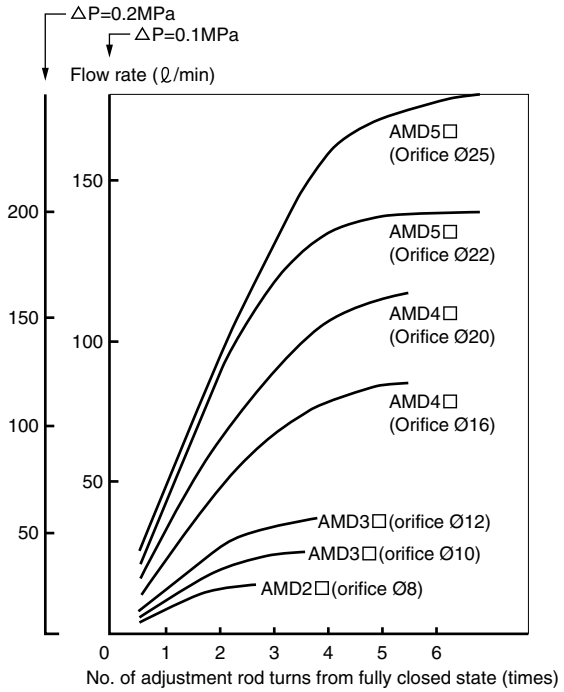

Note 1: Set the adjustment dial so that it opens at least 3/8 turn from fully closed. If closed further, vibration or flow fluctuation, etc., may occur, depending on working conditions.

● With bypass (water)

No. of turns - flow rate

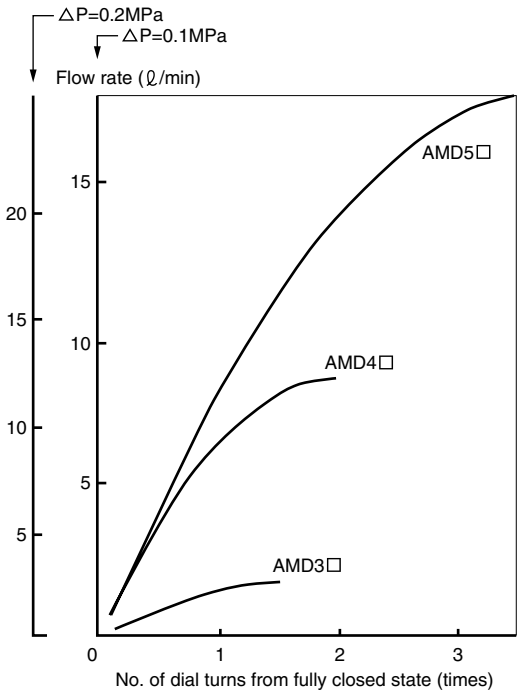

MMD

Overview

This chemical liquid manual valve for semiconductor manufacturing equipment is available in 1/8 inch to 1 inch port sizes and different operations.

Features

- The spring seal provides stable sealing.
  (MMD**2, GMMD**2, TMD series)
- Assorted fitting variations
- The easy-to-read indicator enables open/close status to be checked visually.
- No harmful polyvinyl chlorides
  No harmful polyvinyl chlorides generating toxic chlorine-based gases are used in actuator material.
  (MMD*02, GMMD*02 Series)

⚠ Precautions Intro	7
2 port valve	
MMD*02 PFA body	76
MMD*02 stainless steel body	84
Sister product MMD*0	98
Toggle valve TMD*02	102
Manifold	
GMMD*02 PTFE body	90
■ Electric catalog file list	156

Chemical liquid manual valve

MMD$^{3}_{4}_{5}$02 Series

● Orifice: MMD302: Ø6.3 to Ø10
MMD402: Ø14.7 to Ø16
MMD502: Ø20

CAD

Subject to Export Trade Control Ordinances

*Target: MMD402 and 502 only

Specifications

Descriptions	MMD302	MMD402	MMD502
Working fluid	Chemical liquids, pure water (Note 1)		
Fluid temperature ˚C	5 to 90 (Note 2, 3)		
Withstanding pressure MPa	1.2		
Working pressure range (A -> B) MPa	0 to 0.4		
Working pressure range (B -> A) MPa	0 to 0.4		
Valve seat leakage cm³/min	0 (at, water pressure)		
Back pressure MPa	0 to 0.4		
Ambient temperature ˚C	0 to 60		
Installation attitude	Free		
Connection	ODØ10 tube connection (fitting integrated type) ODØ12 tube connection (fitting integrated type) OD3/8" tube connection (fitting integrated type) OD1/2" tube connection (fitting integrated type)	OD3/4" tube connection (Fitting integrated type)	ODØ25 tube connection (fitting integrated type) OD1" tube connection (fitting integrated type) Nominal 16 (PVC union fitting integrated type) Nominal 20 (PVC union fitting integrated type)
Orifice	Ø6.3, Ø6.4, Ø7.5, Ø8, Ø9.4, Ø9.5, Ø10	Ø14.7, Ø15.9, Ø16	Ø20
Cv value	0.8, 1.25, 1.8	5	8

Note 1: Check the compatibility of the product's configuration materials, working fluid, and ambient atmosphere before use.
Note 2: 5 to 50 ˚C for PVC union fitting for MMD502 connection.
Note 3: 5 to 40 ˚C for hydrofluoric acids.

 ⚠ Read the precautions on pages 7 to 12 in the introduction before use.

Internal structure and parts list

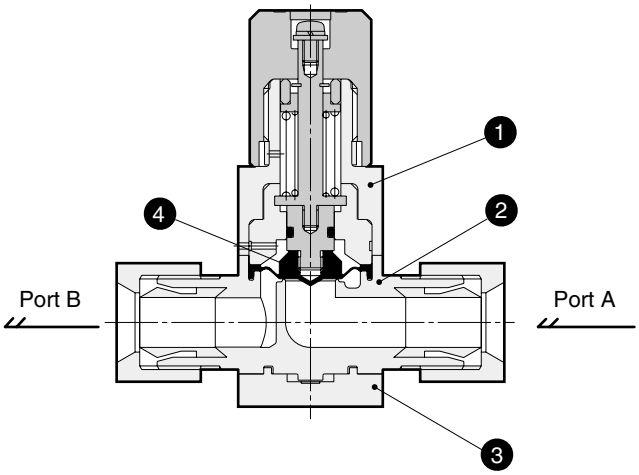

No.	Parts name	Material	Quantity
1	Actuator assembly	PP	1
2	Body	PFA	1
3	Mounting plate	PPS	1
4	Diaphragm	PTFE	1

How to order

● MMD302 Series (Connection: Ø10, 3/8" tube)

MMD302 - 10UJ - 8 - M

Model No. | Orifice | Ⓐ Connection | Ⓑ Fluid

Symbol	Descriptions \ Orifice	Ⓐ Connection												
		10US	10BUS	10UJ	10BUJ	10UP	10BUP	10UA	10BUA	10UR	10BUR	10UK	10BUK	10BUW
		Super type Pillar fitting integrated type		Super 300 type Pillar fitting J series integrated type		Super 300 type Pillar fitting P series integrated type		F-LOCK 20A series fitting integrated type		F-LOCK 60 series fitting integrated type		Final lock fitting integrated type		FLARTEC fitting integrated type
		Ø10 X Ø8 tube connection	3/8" X 1/4" tube connection	Ø10 X Ø8 tube connection	3/8" X 1/4" tube connection	Ø10 X Ø8 tube connection	3/8" X 1/4" tube connection	Ø10 X Ø8 tube connection	3/8" X 1/4" tube connection	Ø10 X Ø8 tube connection	3/8" X 1/4" tube connection	Ø10 X Ø8 tube connection	3/8" X 1/4" tube connection	3/8" X 1/4" tube connection
	Orifice	Ø8		Ø8		Ø8		Ø8		Ø7	Ø6.4	Ø7.5		Ø6.3
Ⓑ Fluid														
		PFA: PFA molded body, PTFE: PTFE machined body												
Blank	Standard	PFA		PFA		PFA		PFA		PTFE	PFA	PFA		PTFE
M	For ammonia													
P	For nitric acid, for hydrofluoric acid													

● Model No. for type with coated metal section

MMD302 - A - 8 - B C

Coated

● Bottom installation type No.

MMD302 - A - 8 - B X

Bottom installation

● Coated metal section + bottom installation type No.

MMD302 - A - 8 - B C X

Coated | Bottom installation

How to order

● MMD302 Series (Connection: Ø12, 1/2" tube)

MMD302 - 12UJ - 10 - M

- MMD302: Model No.
- 10: Orifice
- M: Ⓑ Fluid
- 12UJ: Ⓐ Connection

Ⓐ Connection													
12US	15BUS	12UJ	15BUJ	12UP	15BUP	12UA	15BUA	12UR	15BUR	12UK	15BUK	15BUW
Super type Pillar fitting integrated type		Super 300 type Pillar fitting J series integrated type		Super 300 type Pillar fitting P series integrated type		F-LOCK 20A series fitting integrated type		F-LOCK 60 series fitting integrated type		Final lock fitting integrated type		FLARTEC fitting integrated type
Ø12 X Ø10 tube connection	1/2" X 3/8" tube connection	Ø12 X Ø10 tube connection	1/2" X 3/8" tube connection	Ø12 X Ø10 tube connection	1/2" X 3/8" tube connection	Ø12 X Ø10 tube connection	1/2" X 3/8" tube connection	Ø12 X Ø10 tube connection	1/2" X 3/8" tube connection	Ø12 X Ø10 tube connection	1/2" X 3/8" tube connection	1/2" X 3/8" tube connection
Orifice		Ø10		Ø10		Ø10		Ø10		Ø9.5		Ø10		Ø9.4

Symbol	Descriptions	Ⓑ Fluid
		PFA: PFA molded body
Blank	Standard	PFA
M	For ammonia	PFA
P	For nitric acid, for hydrofluoric acid	PFA

● Model No. for type with coated metal section

MMD302 - A - 10 - B C

- C: Coated

● Bottom installation type No.

MMD302 - A - 10 - B X

- X: Bottom installation

● Coated metal section + bottom installation type No.

MMD302 - A - 10 - B C X

- C: Coated
- X: Bottom installation

How to order

● MMD402 Series

MMD402 - 20BUA - 16 - M

Model No. / Orifice / Ⓑ Fluid / Ⓐ Connection

Ⓐ Connection	20BUS	20BUJ	20BUP	20BUA	20BUR	20BUK	20BUW
	Super type Pillar fitting integrated type	SUPER 300 type Pillar fitting J series integrated type	Super 300 type Pillar fitting P series integrated type	F-LOCK 20A series fitting integrated type	F-LOCK 60 series fitting integrated type	Final lock fitting integrated type	FLARTEC fitting integrated type
	3/4" X 5/8" tube connection						
Symbol / Descriptions \ Orifice	Ø16	Ø16	Ø16	Ø16	Ø15.9	Ø16	Ø14.7
Ⓑ Fluid							
	PFA: PFA molded body						
Blank / Standard	PFA	PFA	PFA	PFA	PFA	PFA	PFA
M / For ammonia							
P / For nitric acid, for hydrofluoric acid							

● Model No. for type with coated metal section

MMD402 - A - 16 - B C

Coated

● Bottom installation type No.

MMD402 - A - 16 - B X

Bottom installation

● Coated metal section + bottom installation type No.

MMD402 - A - 16 - B C X

Coated / Bottom installation

How to order

●MMD502 Series

MMD502 - 20AU - 20 - M

- MMD502: Model No.
- 20: Orifice
- M: Ⓑ Fluid
- 20AU: Ⓐ Connection

Ⓐ Connection														
25US	25BUS	25UJ	25BUJ	25UP	25BUP	25BUA	25UR	25BUR	25UK	25BUK	25BUW	15AU	20AU
Super type Pillar fitting integrated type		Super 300 type Pillar fitting J series integrated type		Super 300 type Pillar fitting P series integrated type		F-LOCK 20A series fitting integrated type	F-LOCK 60 series fitting integrated type		Final lock fitting integrated type		FLARTEC fitting integrated type	PVC union fitting integrated type	
Ø25 X Ø22 tube connection	1" X 7/8" tube connection	Ø25 X Ø22 tube connection	1" X 7/8" tube connection	Ø25 X Ø22 tube connection	1" X 7/8" tube connection	1" X 7/8" tube connection (Note 1)	Ø25 X Ø22 tube connection	1" X 7/8" tube connection	Ø25 X Ø22 tube connection	1" X 7/8" tube connection	1" X 7/8" tube connection	Nominal 16	Nominal 20
Orifice													
Ø20		Ø20		Ø20		Ø20	Ø20		Ø20		Ø20	Ø20	

Symbol	Descriptions	Ⓑ Fluid								
		PFA: PFA molded body, PTFE: PTFE machined body								
Blank	Standard	PFA	PFA	PFA	PFA	PTFE	PFA	PTFE	PFA
M	For ammonia								
P	For nitric acid, for hydrofluoric acid								

●Model No. for type with coated metal section

MMD502 - A - 20 - B C

- C: Coated

●Bottom installation type No.

MMD502 - A - 20 - B X

- X: Bottom installation

●Coated metal section + bottom installation type No.

MMD502 - A - 20 - B C X

- C: Coated
- X: Bottom installation

⚠ Note on model No. selection

Note 1: Also usable for the Ø25 x Ø22 diameter tube connection.

Dimensions

● Fitting integrated type

·MMD302- *1

·MMD402- *1

·MMD502- *1

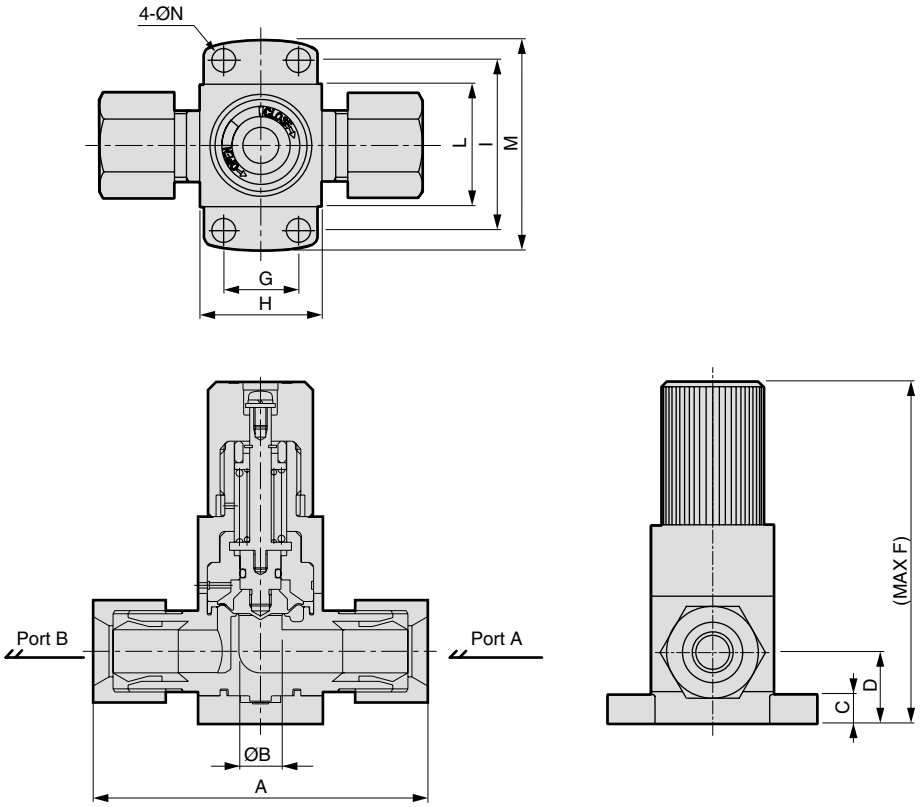

Symbol	C	D	F	G	H	I	L	M	N
MMD302	8.5	21	106	22	36	50	36	62	7
MMD402	9	27	134	28	46	64	46	82	9
MMD502	10	35	166	40	60	78	60	96	9

MMD3 (10mm)

*1 (Connection model No.)	A	B
10US	86	8
10BUS	86	8
10UJ	82	8
10BUJ	82	8
10UP	86	8
10BUP	86	8
10UA	78	8
10BUA	78	8
10UR	110	7
10BUR	114	6.4
10UK	96	7.5
10BUK	96	7.5
10BUW	101	6.3

MMD3 (12mm)

*1 (Connection model No.)	A	B
12US	95	10
15BUS	95	10
12UJ	90	10
15BUJ	90	10
12UP	94	10
15BUP	94	10
12UA	86	10
15BUA	86	10
12UR	110	9.5
15BUR	114	9.5
12UK	102	10
15BUK	102	10
15BUW	103	9.4

MMD4

*1 (Connection model No.)	A	B
20BUS	124	16
20BUJ	114	16
20BUP	118	16
20BUA	108	16
20BUR	134	15.9
20BUK	119	16
20BUW	122	14.7

MMD5

*1 (Connection model No.)	A	B
25US	147	20
25BUS	147	20
25UJ	142	20
25BUJ	142	20
25UP	146	20
25BUP	146	20
25BUA	140	20
25UR	159	20
25BUR	162	20
25UK	141	20
25BUK	141	20
25BUW	156	20

Dimensions

● PVC union fitting integrated type (MMD502)

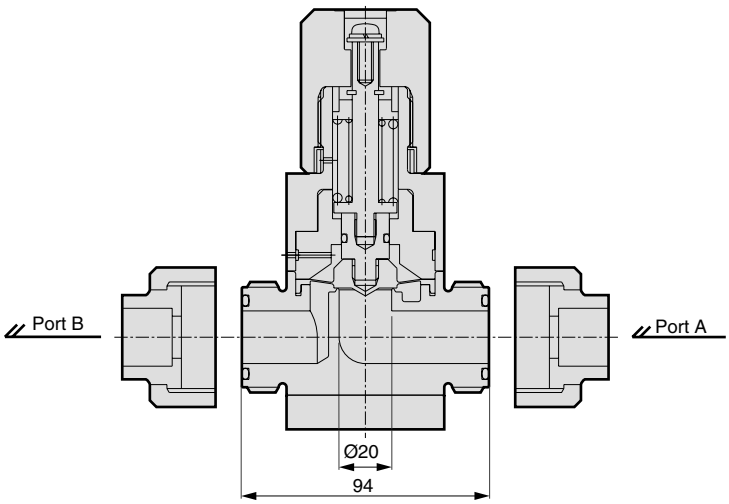

● Bottom installation type

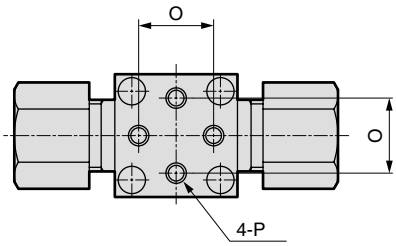

Model No.	O	P
MMD302	22±0.3	M6 depth 9
MMD402	28±0.3	M8 depth 10
MMD502	40±0.3	M8 depth 13

Stainless steel body chemical liquid manual valve

MMD$^{3}_{4}_{5}$02 Series

● Orifice: MMD302: Ø8/Ø10
MMD402: Ø16
MMD502: Ø20

CAD

Specifications

Descriptions	MMD302	MMD402	MMD502
Working fluid	Chemical liquids, pure water (Note 1)		
Fluid temperature ˚C	5 to 90		
Withstanding pressure MPa	1.2		
Working pressure range (A → B) MPa	0 to 0.4		
Working pressure range (B → A) MPa	0 to 0.4		
Valve seat leakage cm³/min	0 (at, water pressure)		
Back pressure MPa	0 to 0.4		
Ambient temperature ˚C	0 to 60		
Installation attitude	Free		
Connection	Rc1/4·Rc3/8 Ø3/8" SUS weld tube Ø3/8" double barbed fitting (Note 2) Ø1/2" SUS weld tube Ø1/2" double barbed fitting (Note 2)	Rc1/2 Ø3/4" SUS weld tube Ø3/4" double barbed fitting (Note 2)	Ø1" double barbed fitting (Note 2)
Orifice	Ø8/Ø10	Ø16	Ø20

Note 1: Check the compatibility of the product's configuration materials, working fluid, and ambient atmosphere before use.
Note 2: For the double-barbed fitting, fluorine-based lubricant is applied on the sliding surface of the front ferrule and fitting.

Internal structure and parts list

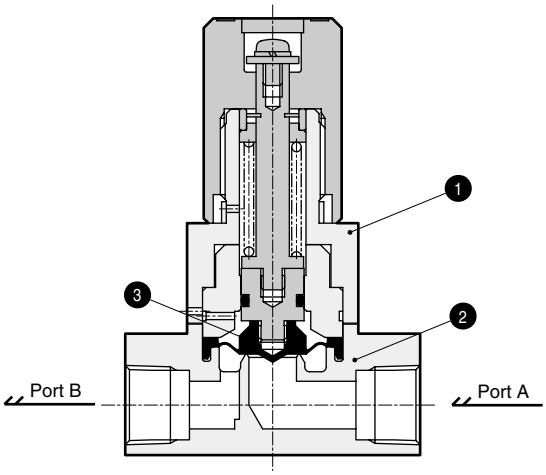

No.	Parts name	Material	Quantity
1	Actuator assembly	PP	1
2	Body	SUS316L	1
3	Diaphragm	PTFE	1

The material differs with the model. Contact CKD for details.

 ⚠ Read the precautions on pages 7 to 12 in the introduction before use.

How to order

● MMD*02 Series

MMD302 - 4BT - P

MMD402

MMD502

Ⓑ Actuator material

Model No.

Ⓐ Connection

		MMD302						MMD402			MMD502	
		Ⓐ Connection										
		8	3BT	6S	10	4BT	8S	15	6BT	12S	8BT	16S
		Rc 1/4	3/8" X t1.0 SUS weld tube	3/8" X 1/4" tube connection Double barbed fitting	Rc 3/8	1/2" X t1.24 SUS weld tube	1/2" X 3/8" tube connection Double barbed fitting	Rc 1/2	3/4" X t1.24 SUS weld tube	3/4" X 1/4" tube connection Double barbed fitting	1" X t1.65 SUS weld tube	1" X 7/8" tube connection Double barbed fitting
Symbol	Descriptions / Orifice	Ø8			Ø10			Ø16			Ø20	
Ⓑ Actuator material												
P	PP	●	●	●	●	●	●	●	●	●	●	●
A	Aluminum	●	●	●	●	●	●	●	●	●	●	●

Dimensions

● Rc thread type

·MMD302-8/10

·MMD402-15

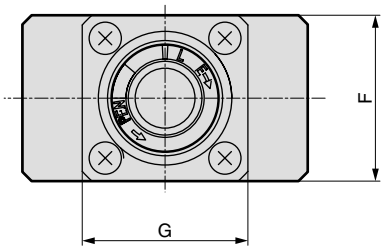

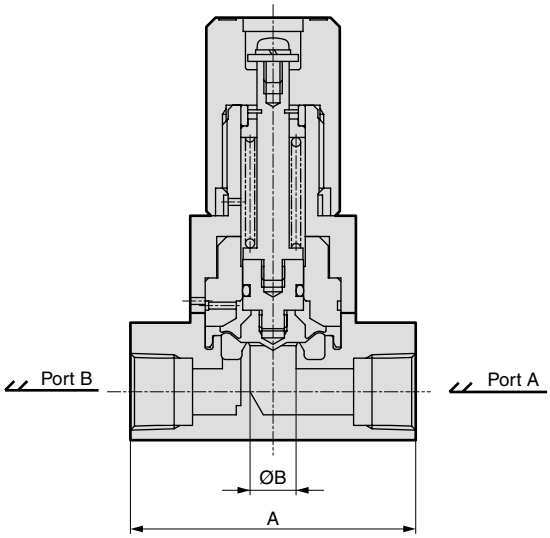

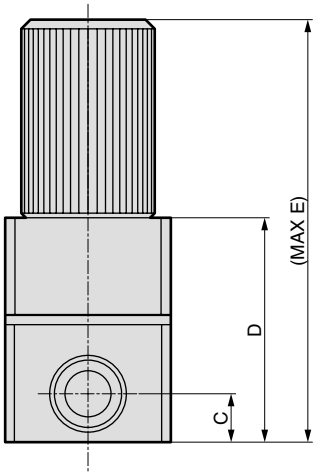

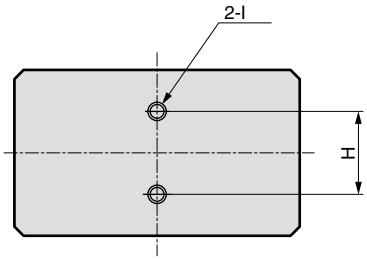

Symbol	A	B	C	D	E	F	G	H	I
MMD302-8 · 10	62	10	10.5	49	96	36	36	18±0.3	M4 depth 5
MMD402-15	80	16	13.5	64	121	46	46	26±0.3	M5 depth 6

Dimensions

● SUS weld tube
·MMD302-3BT/4BT
·MMD402-6BT

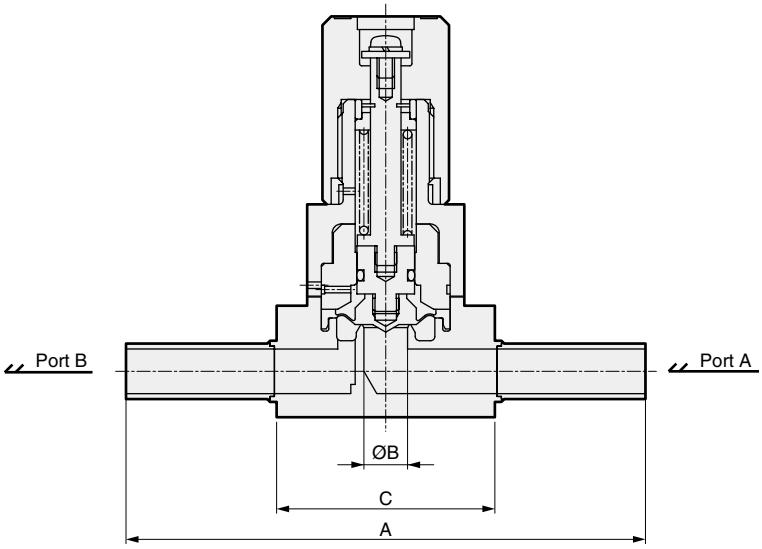

Symbol	A	B	C
MMD302-3BT / 4BT	116	10	50
MMD402-6BT	126	16	61

● Double barbed fitting
·MMD302-6S/8S
·MMD402-12S

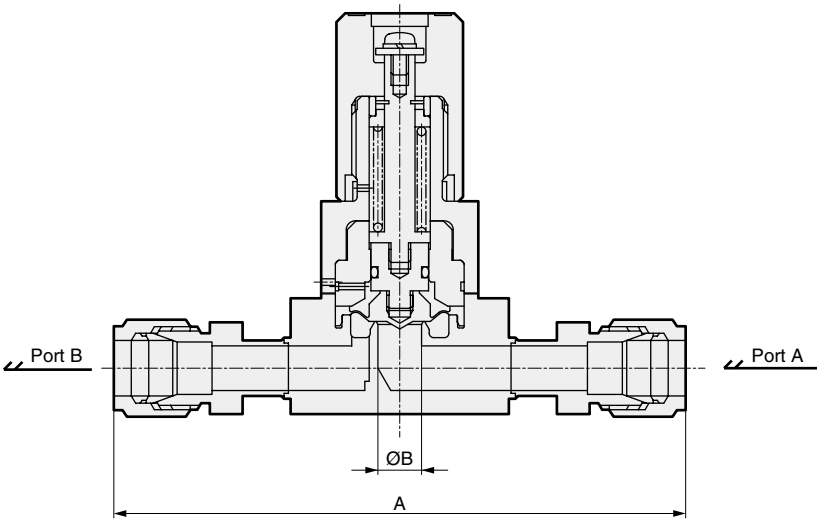

Symbol	A	B
MMD302-6S	116	10
MMD302-8S	130	10
MMD402-12S	150	16

Dimensions

● Double barbed fitting
·MMD502-16S

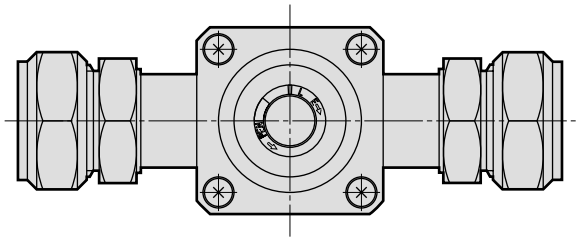

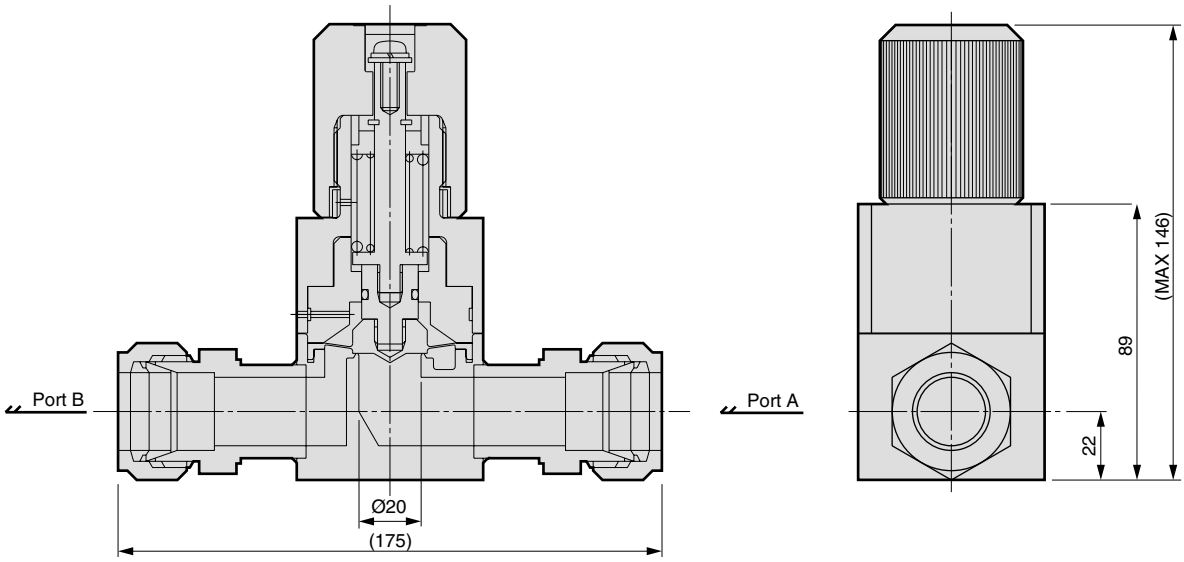

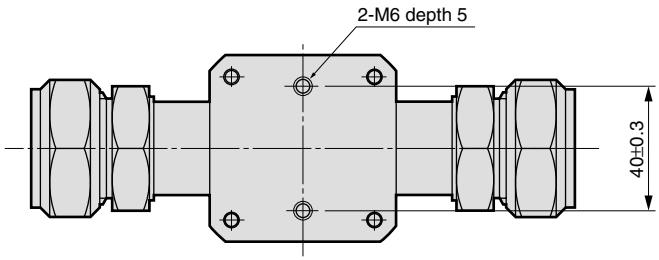

Dimensions

● SUS weld tube
·MMD502-8BT

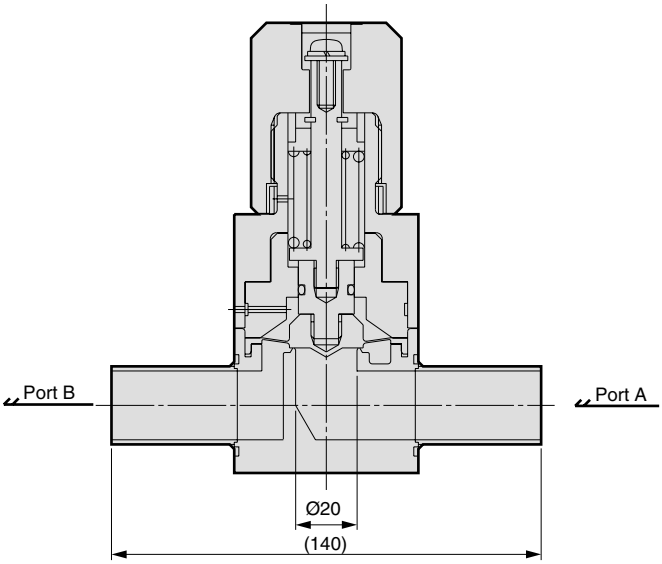

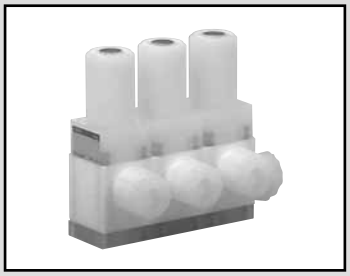

Chemical liquid manual valve (manifold/branch valve)

GMMD$^{3}_{4}_{5}$02 Series

- Orifice: GMMD302: Ø6 to Ø10
  GMMD402: Ø14.7 to Ø16
  GMMD502: Ø20
- No. of stations: 1 to 5 stations

Subject to Export Trade Control Ordinances

*Target: GMMD402 and 502 only

Specifications

Descriptions	GMMD302	GMMD402	GMMD502
Working fluid	Chemical liquids, pure water (Note 1)		
Fluid temperature ˚C	5 to 90 (Note 3)		
Withstanding pressure MPa	1.2		
Working pressure range MPa	0 to 0.4		
Valve seat leakage cm³/min	0 (at, water pressure)		
Back pressure MPa	0 to 0.4		
Ambient temperature ˚C	0 to 60		
Installation attitude	Free		
Connection	ODØ10 tube connection (fitting integrated type) ODØ12 tube connection (fitting integrated type) OD3/8" tube connection (fitting integrated type) OD1/2" tube connection (fitting integrated type)	OD3/4" tube connection (fitting integrated type)	ODØ25 tube connection (fitting integrated type) OD1" tube connection (fitting integrated type)
Orifice	Ø6 to Ø10 (Note 2)	Ø14.7 to Ø16 (Note 2)	Ø20

Note 1: Check the compatibility of the product's configuration materials, working fluid, and ambient atmosphere before use.
Note 2: Confirm the orifice for each connection in the Model indication section.
Note 3: 5 to 40 ˚C for hydrofluoric acids.

 ⚠ Read the precautions on pages 7 to 12 in the introduction before use.

Internal structure and parts list

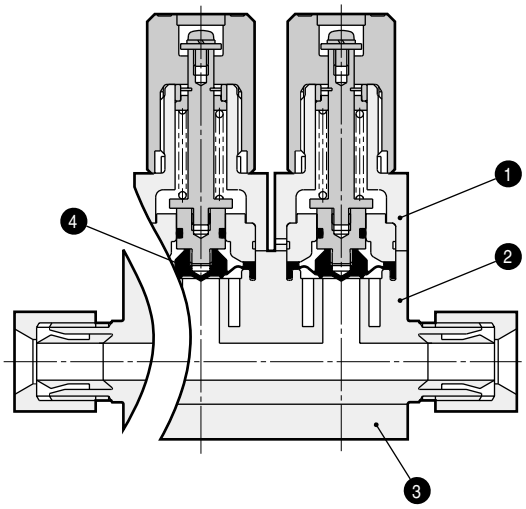

No.	Parts name	Material
1	Actuator assembly	PP
2	Body	PTFE
3	Mounting plate	PP
4	Diaphragm	PTFE

How to order

● GMMD3 Series (Connection: Ø10, 3/8" tube)

GMMD302 - 10UK - 4 P L

- GMMD302: Model No.
- 10UK: Ⓐ Connection
- 4: Ⓑ No. of stations
- P: Ⓒ Fluid
- L: Ⓓ Port A position

Symbol	Descriptions \ Orifice	Ⓐ Connection												
		10US	10BUS	10UJ	10BUJ	10UP	10BUP	10UA	10BUA	10UR	10BUR	10UK	10BUK	10BUW
		Super type Pillar fitting integrated type		Super 300 type Pillar fitting J series integrated type		Super 300 type Pillar fitting P series integrated type		F-LOCK 20A series fitting integrated type		F-LOCK 60 series fitting integrated type		Final lock fitting integrated type		FLARTEC fitting integrated type
		Ø10 X Ø8 tube connection	3/8" X 1/4" tube connection	Ø10 X Ø8 tube connection	3/8" X 1/4" tube connection	Ø10 X Ø8 tube connection	3/8" X 1/4" tube connection	Ø10 X Ø8 tube connection	3/8" X 1/4" tube connection	Ø10 X Ø8 tube connection	3/8" X 1/4" tube connection	Ø10 X Ø8 tube connection	3/8" X 1/4" tube connection	3/8" X 1/4" tube connection
	Orifice	Ø8		Ø8		Ø8		Ø8		Ø7	Ø6	Ø8		Ø6.3
Ⓑ No. of stations														
1 to 5	1 station to 5 stations	●	●	●	●	●	●	●	●	●	●	●	●	●
Ⓒ Fluid														
Blank	Standard	●	●	●	●	●	●	●	●	●	●	●	●	●
M	For ammonia	●	●	●	●	●	●	●	●	●	●	●	●	●
P	For nitric acid, for hydrofluoric acid	●	●	●	●	●	●	●	●	●	●	●	●	●
Ⓓ Port A position														
Blank	Right	●	●	●	●	●	●	●	●	●	●	●	●	●
L	Left	●	●	●	●	●	●	●	●	●	●	●	●	●
W	Both sides	●	●	●	●	●	●	●	●	●	●	●	●	●

Available with PTFE machined body.

● Model No. for type with coated metal section

GMMD302 - A - B C D C

- C: Coated

How to order

● GMMD3 Series (Connection: Ø12, 1/2" tube)

GMMD302 - 12UK - 4 M L

- Model No.
- Ⓐ Connection
- Ⓑ No. of stations
- Ⓒ Fluid
- Ⓓ Port A position

		Ⓐ Connection												
		12US	15BUS	12UJ	15BUJ	12UP	15BUP	12UA	15BUA	12UR	15BUR	12UK	15BUK	15BUW
		Super type Pillar fitting integrated type		Super 300 type Pillar fitting J series integrated type		Super 300 type Pillar fitting P series integrated type		F-LOCK 20A series fitting integrated type		F-LOCK 60 series fitting integrated type		Final lock fitting integrated type		FLARTEC fitting integrated type
		Ø12 X Ø10 tube connection	1/2" X 3/8" tube connection	Ø12 X Ø10 tube connection	1/2" X 3/8" tube connection	Ø12 X Ø10 tube connection	1/2" X 3/8" tube connection	Ø12 X Ø10 tube connection	1/2" X 3/8" tube connection	Ø12 X Ø10 tube connection	1/2" X 3/8" tube connection	Ø12 X Ø10 tube connection	1/2" X 3/8" tube connection	1/2" X 3/8" tube connection
Symbol	Descriptions / Orifice	Ø10		Ø10		Ø10		Ø10		Ø9.5		Ø10		Ø9.4
Ⓑ No. of stations														
1 to 5	1 station to 5 stations	●	●	●	●	●	●	●	●	●	●	●	●	●
Ⓒ Fluid														
Blank	Standard	●	●	●	●	●	●	●	●	●	●	●	●	●
M	For ammonia	●	●	●	●	●	●	●	●	●	●	●	●	●
P	For nitric acid, for hydrofluoric acid	●	●	●	●	●	●	●	●	●	●	●	●	●
Ⓓ Port A position														
Blank	Right	●	●	●	●	●	●	●	●	●	●	●	●	●
L	Left	●	●	●	●	●	●	●	●	●	●	●	●	●
W	Both sides	●	●	●	●	●	●	●	●	●	●	●	●	●

Available with PTFE machined body.

● Model No. for type with coated metal section

GMMD302 - A - B C D C

- Coated

How to order

● GMMD4 Series

GMMD402 - 20BUA - 4 M L

- GMMD402: Model No.
- 20BUA: Ⓐ Connection
- 4: Ⓑ No. of stations
- M: Ⓒ Fluid
- L: Ⓓ Port A position

Symbol	Descriptions \ Orifice	20BUS Super type Pillar fitting integrated type	20BUJ Super 300 type Pillar fitting J series integrated type	20BUP Super 300 type Pillar fitting P series integrated type	20BUA F-LOCK 20A series fitting integrated type	20BUR F-LOCK 60 series fitting integrated type	20BUK Final lock fitting integrated type	20BUW FLARTEC fitting integrated type
		Ⓐ Connection						
		3/4" X 5/8" tube connection						
		Ø16	Ø16	Ø16	Ø16	Ø15.9	Ø16	Ø14.7
	Ⓑ No. of stations							
1 to 5	1 station to 5 stations	●	●	●	●	●	●	●
	Ⓒ Fluid							
Blank	Standard	●	●	●	●	●	●	●
M	For ammonia	●	●	●	●	●	●	●
P	For nitric acid, for hydrofluoric acid	●	●	●	●	●	●	●
	Ⓓ Port A position							
Blank	Right	●	●	●	●	●	●	●
L	Left	●	●	●	●	●	●	●
W	Both sides	●	●	●	●	●	●	●

Available with PTFE machined body.

● Model No. for type with coated metal section

GMMD402 - A - B C D C

- C: Coated

How to order

● GMMD5 Series

GMMD502 - 25BUK - 4 M W

- GMMD502: Model No.
- 25BUK: Ⓐ Connection
- 4: Ⓑ No. of stations
- M: Ⓒ Fluid
- W: Ⓓ Port A position

		Ⓐ Connection													
		25US	25BUS	25UJ	25BUJ	25UP	25BUP	25BUA	25UR	25BUR	25UK	25BUK	25BUW	15AU	20AU
		Super type Pillar fitting integrated type		Super 300 type Pillar fitting J series integrated type		Super 300 type Pillar fitting P series integrated type		F-LOCK 20A series fitting integrated type	F-LOCK 60 series fitting integrated type		Final lock fitting integrated type		FLARTEC fitting integrated type	PVC union fitting integrated type	
		Ø25 X Ø22 tube connection	1" X 7/8" tube connection	Ø25 X Ø22 tube connection	1" X 7/8" tube connection	Ø25 X Ø22 tube connection	1" X 7/8" tube connection	1" X 7/8" tube connection (Note 1)	Ø25 X Ø22 tube connection	1" X 7/8" tube connection	Ø25 X Ø22 tube connection	1" X 7/8" tube connection	1" X 7/8" tube connection	Nominal 16	Nominal 20
Symbol	Descriptions / Orifice	Ø20		Ø20		Ø20		Ø20	Ø20		Ø20		Ø20	Ø20	
Ⓑ No. of stations															
1 to 4	1 station to 4 stations	●	●	●	●	●	●	●	●	●	●	●	●	●	●
Ⓒ Fluid															
Blank	Standard	●	●	●	●	●	●	●	●	●	●	●	●	●	●
M	For ammonia	●	●	●	●	●	●	●	●	●	●	●	●	●	●
P	For nitric acid, for hydrofluoric acid	●	●	●	●	●	●	●	●	●	●	●	●	●	●
Ⓓ Port A position															
Blank	Right	●	●	●	●	●	●	●	●	●	●	●	●	●	●
L	Left	●	●	●	●	●	●	●	●	●	●	●	●	●	●
W	Both sides	●	●	●	●	●	●	●	●	●	●	●	●	●	●

Available with PTFE machined body.

● Model No. for type with coated metal section

GMMD502 - A - B C D C

- C: Coated

⚠ Note on model No. selection

Note 1: Also usable for the Ø25 x Ø22 diameter tube connection.

Dimensions

● Fitting integrated type

·GMMD302- *1

·GMMD402- *1

·GMMD502- *1

Port A position: blank

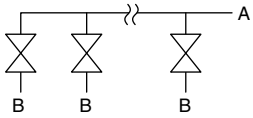

Port A position: L

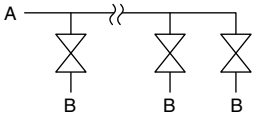

Port A position: W

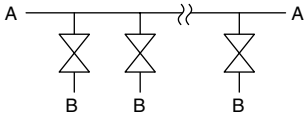

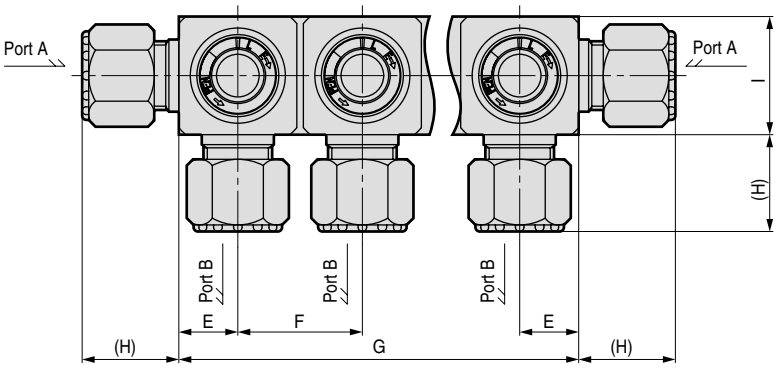

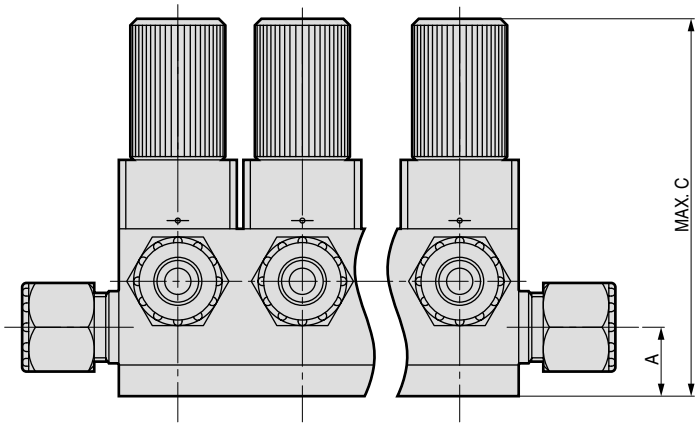

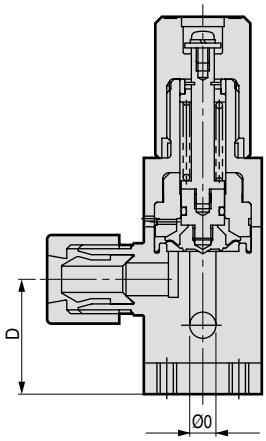

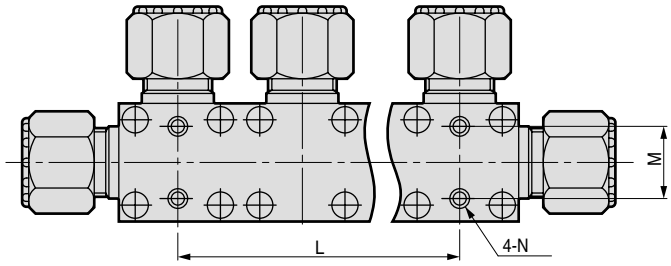

Dimensions

No. of stations	Model No.	A	C	D	E	F	G	I	L	M	N
1	GMMD302	21	119	36	18	38	36	36	-	22±0.3	M6 depth 9
	GMMD402	27	153	46	23	48	46	46	-	28±0.3	M8 depth 10
	GMMD502	35	191	60	30	62	60	60	-	40±0.3	M8 depth 13
2	GMMD302	21	119	36	18	38	74	36	38±0.3	22±0.3	M6 depth 9
	GMMD402	27	153	46	23	48	94	46	48±0.4	28±0.3	M8 depth 10
	GMMD502	35	191	60	30	62	122	60	62±0.4	40±0.3	M8 depth 13
3	GMMD302	21	119	36	18	38	112	36	76±0.4	22±0.3	M6 depth 9
	GMMD402	27	153	46	23	48	142	46	96±0.5	28±0.3	M8 depth 10
	GMMD502	35	191	60	30	62	184	60	124±0.5	40±0.3	M8 depth 13
4	GMMD302	21	119	36	18	38	150	36	114±0.5	22±0.3	M6 depth 9
	GMMD402	27	153	46	23	48	190	46	144±0.5	28±0.3	M8 depth 10
	GMMD502	35	191	60	30	62	246	60	186±0.7	40±0.3	M8 depth 13
5	GMMD302	21	119	36	18	38	188	36	152±0.7	22±0.3	M6 depth 9
	GMMD402	27	153	46	23	48	238	46	192±0.7	28±0.3	M8 depth 10

GMMD302 (10mm)

*1 (Connection model No.)	H	O
10US	25	8
10BUS	25	8
10UJ	23	8
10BUJ	23	8
10UP	25	8
10BUP	25	8
10UA	21	8
10BUA	21	8
10UR	37	7
10BUR	39	6
10UK	30	8
10BUK	30	8
10BUW	32.5	6.3

GMMD302 (12mm)

*1 (Connection model No.)	H	O
12US	29.5	10
15BUS	29.5	10
12UJ	27	10
15BUJ	27	10
12UP	29	10
15BUP	29	10
12UA	25	10
15BUA	25	10
12UR	37	9.5
15BUR	39	9.5
12UK	33	10
15BUK	33	10
15BUW	33.5	9.4

GMMD402

*1 (Connection model No.)	H	O
20BUS	39	16
20BUJ	34	16
20BUP	36	16
20BUA	31	16
20BUR	44	15.9
20BUK	36.5	16
20BUW	38	14.7

GMMD502

*1 (Connection model No.)	H	O
25US	43.5	20
25BUS	43.5	20
25UJ	41	20
25BUJ	41	20
25UP	43	20
25BUP	43	20
25BUA	40	20
25UR	49.5	20
25BUR	51	20
25UK	40.5	20
25BUK	40.5	20
25BUW	48	20

Chemical liquid manual valve

MMD20·MMD30·MMD40 Series

Metal free design with flow rate adjustment and closing functions

● Orifice: Ø8/Ø10/Ø12/Ø16/Ø20

CAD

Subject to Export Trade Control Ordinances

*Target: Valves with Ø12 or larger orifice

Specifications

Descriptions	MMD20	MMD30		MMD40	
Working fluid	Chemical liquids, pure water, N2 gas, air				
Fluid temperature ˚C	5 to 60 (5 to 90) (Note 2)				
Withstanding pressure MPa	1.4				
Working pressure range MPa	0 to 0.5			0 to 0.4	
Valve seat leakage cm³/min	0 (at, water pressure)				
Ambient temperature ˚C	0 to 40				
Installation attitude	Free				
Connection (Note 1)	Rc3/8	Rc1/2		Rc3/4	
Orifice	Ø8	Ø10	Ø12	Ø16	Ø20
Cv value	1.25	1.8	2.5	5.2	8

Note 1: The fitting integrated type is also available.
Note 2: 5 to 40 ˚C for hydrofluoric acids.

Internal structure and parts list

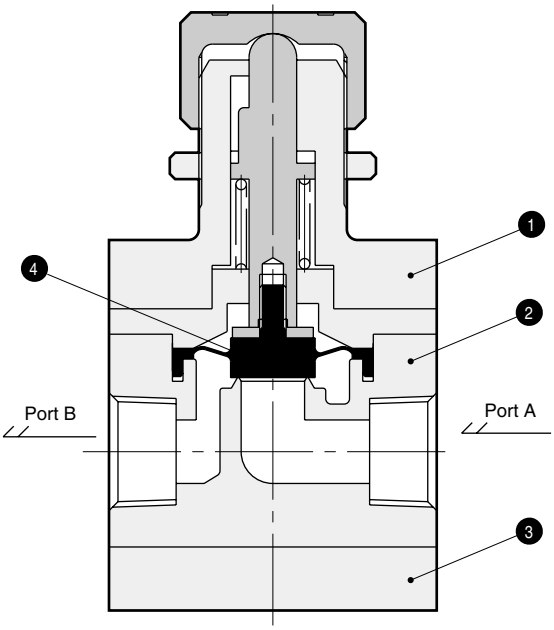

No.	Parts name	Material	Quantity
1	Actuator assembly	CPVC	1
2	Body	PFA	1
3	Mounting plate	CPVC	1
4	Diaphragm	PTFE	1

The material differs with the model. Contact CKD for details.

Flow rate - No. of knob turns (at differential pressure 0.1MPa)

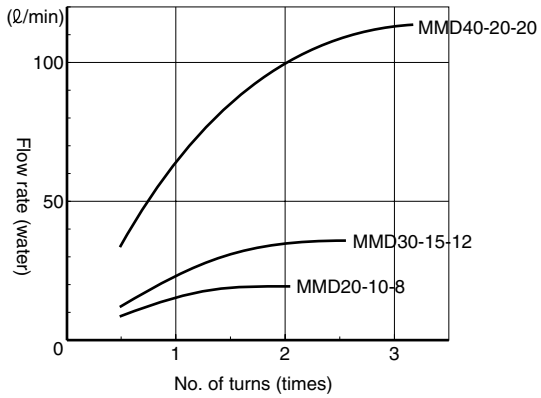

No. of knob turns - flow rate at differential pressure 0.1MPa

● Set the adjustment knob so that it opens at least 3/8 turn from fully closed. If closed further, vibration or flow fluctuation, etc., may occur, depending on working conditions.

● Tighten the knob with the following torque.

MMD20	0.4 to 0.6
MMD30	0.8 to 1.6
MMD40	2.0 to 2.8

(N·m)

 ⚠ Read the precautions on pages 7 to 12 in the introduction before use.

How to order

●MMD2 Series

MMD20 - (10) - 8 - (F)

Model No.

Ⓐ Connection

Ⓑ Fluid

Ⓐ Connection						
10	10US	10BUS	10UF	10BUF	10UA	10BUA
Rc 3/8	Super type Pillar fitting		F-LOCK 20 series fitting integrated type		F-LOCK 20A series fitting integrated type	
	Ø10 X Ø8 tube connection	3/8" X 1/4" tube connection	Ø10 X Ø8 tube connection	3/8" X 1/4" tube connection	Ø10 X Ø8 tube connection	3/8" X 1/4" tube connection

Symbol	Descriptions	10	10US	10BUS	10UF	10BUF	10UA	10BUA
Ⓑ Fluid								
Blank	Standard	●	●	●	●	●	●	●
F	For medium temperature (5 to 90 ˚C)	●	●	●	●	●	●	●

●MMD3 Series

MMD30 - (12US) - (10) - (F)

Model No.

Ⓐ Connection

Ⓑ Orifice

Ⓒ Fluid

Ⓐ Connection						
15	12US	15BUS	12UF	15BUF	12UA	15BUA
Rc 1/2	Super type Pillar fitting integrated type		F-LOCK 20 series fitting integrated type		F-LOCK 20A series fitting integrated type	
	Ø12 X Ø10 tube connection	1/2" X 3/8" tube connection	Ø12 X Ø10 tube connection	1/2" X 3/8" tube connection	Ø12 X Ø10 tube connection	1/2" X 3/8" tube connection

Symbol	Descriptions	15	12US	15BUS	12UF	15BUF	12UA	15BUA
Ⓑ Orifice								
10	Ø10		●	●	●	●	●	●
12	Ø12	●						
Ⓒ Fluid								
Blank	Standard	●	●	●	●	●	●	●
F	For medium temperature (5 to 90 ˚C)	●	●	●	●	●	●	●

How to order

● MMD4 Series

MMD40 - 20 - 20 - F

Model No.

Ⓐ Connection

Ⓑ Orifice

Ⓒ Fluid

Symbol	Descriptions	Ⓐ Connection 20 Rc 3/4	20BUS Super type Pillar fitting integrated type	20BUF F-LOCK 20 series fitting integrated type	20BUA F-LOCK 20A series fitting integrated type
			3/4" X 5/8" tube connection		
Ⓑ Fluid					
16	Ø16		●	●	●
20	Ø20	●			
Ⓒ Fluid					
Blank	Standard	●	●	●	●
F	For medium temperature (5 to 90 ˚C)	●	●	●	●

Dimensions

● RC thread type

·MMD20
·MMD30
·MMD40

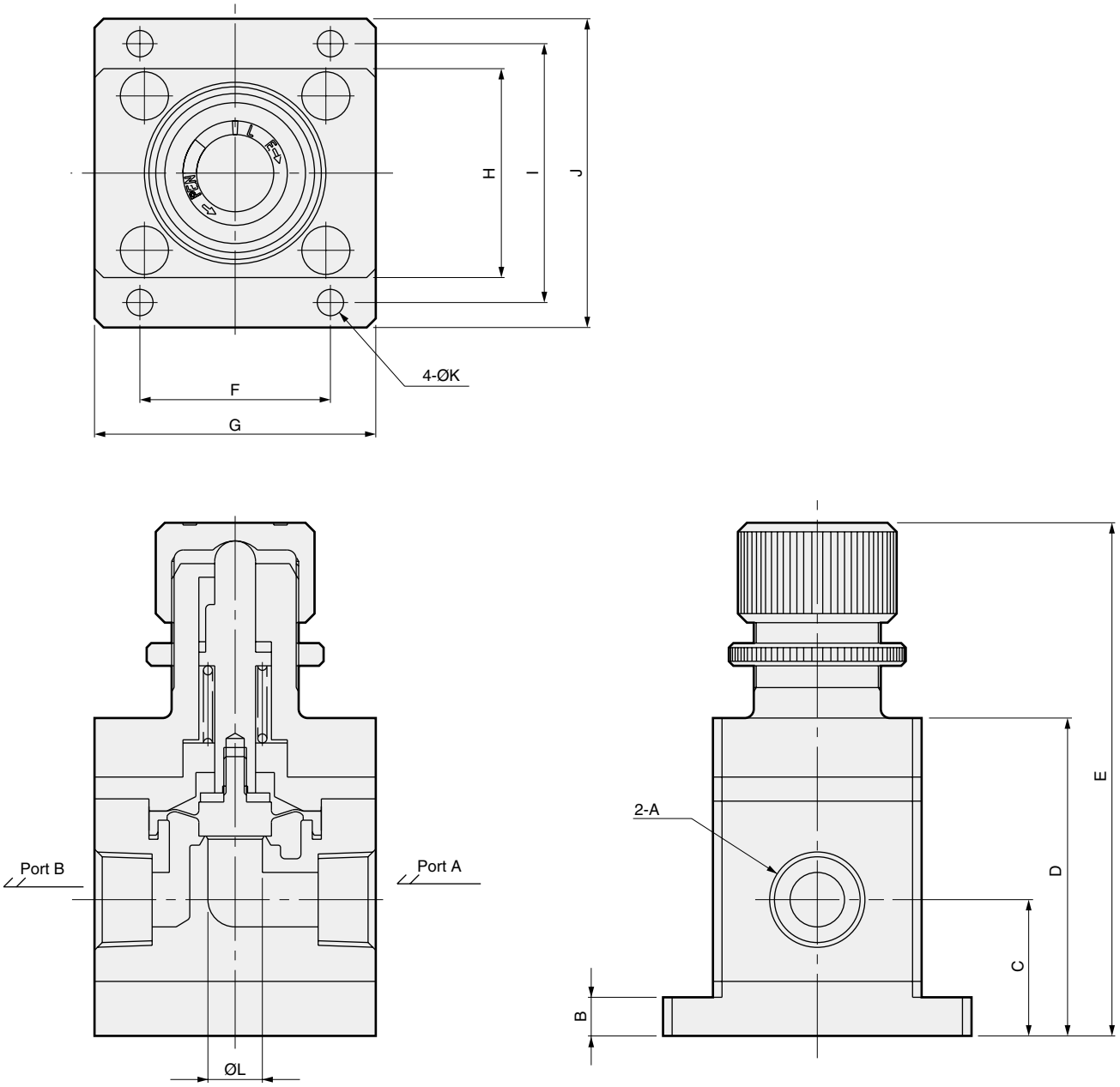

Symbol / Model No.	A	B	C	D	E	F	G	H	I	J	K	ØL
MMD20-10-8	Rc3/8	7	22	56	MAX 100	34	44	36	46	56	5.8	8
MMD30-15-12	Rc1/2	8	30	70	MAX 115	42	62	46	57	68	5.8	12
MMD40-20-20	Rc3/4	8	34	84	MAX 136	56	80	58	71	84	6.8	20

Chemical liquid toggle valve

TMDZ02·TMD002·TMD302 Series

One-touch manual open/close
Perfect for emergency shutdown and filter purging

● Orifice: Ø2/Ø4/Ø10/Ø12

CAD

Subject to Export Trade Control Ordinances

*Target: Valves with Ø12 orifice

Specifications

Descriptions	TMDZ02-*-2	TMD002-*-4	TMD302-*-*	
Working fluid	Chemical liquids, pure water, N_2 gas, air			
Fluid temperature ˚C	5 to 60 (Note 4)			
Withstanding pressure MPa	1.4			
Working pressure range (A -> B) MPa	0 to 0.5			
Working pressure range (B -> A) MPa	0 to 0.3 (TMDZ/TMD0), 0 to 0.15 (TMD3)			
Valve seat leakage cm^3/min	0 (at, water pressure)			
Back pressure MPa	0 to 0.3		0 to 0.15	
Ambient temperature ˚C	0 to 40			
Installation attitude	Free			
Connection	Rc1/8 OD Ø3 tube connection OD1/8" tube connection	Rc1/8 OD Ø6 tube connection OD1/4" tube connection	Rc1/2 OD Ø12 tube connection OD1/2" tube connection	
Orifice	Ø2	Ø4	Ø10	Ø12
Cv value	0.08 (Note 1)	0.32	1.8	2.5

Note 1: The Cv for the PFA body connection Rc 1/8 is 0.12.
Note 2: Consult with CKD for other port sizes.
Note 3: Consult with CKD for other knob operation types 180 ˚ movable, automatic return.
Note 4: 5 to 40 ˚C for hydrofluoric acids.

Internal structure and parts list

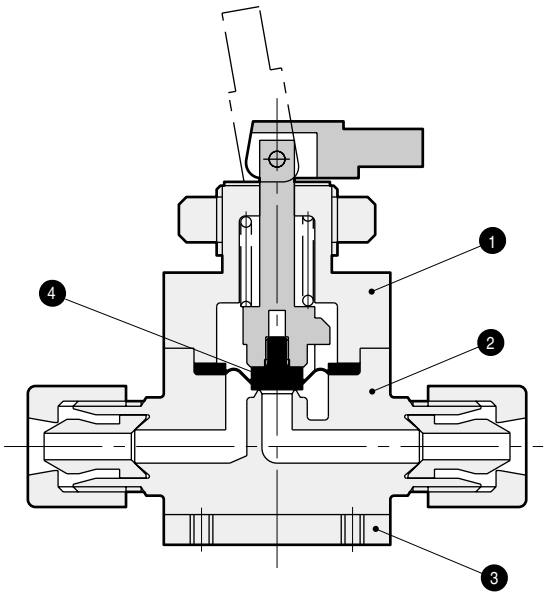

No.	Parts name	Material	Quantity
1	Actuator assembly	CPVC	1
2	Body	PFA	1
3	Mounting plate	SUS	1
4	Diaphragm	PTFE	1

The material differs with the model. Contact CKD for details.

 ⚠ Read the precautions on pages 7 to 12 in the introduction before use.

How to order

●TMDZ/TMD0 Series

TMDZ02 - 3US - 2

TMD002

Model No.

Ⓐ Connection

Ⓑ Orifice

		TMDZ			TMD0								
Ⓐ Connection													
		6	3US	6BUS	6	6US	8BUS	6UJ	8BUJ	6UP	8BUP	6UF	8BUF
		Rc 1/8	Super type Pillar fitting integrated type		Rc 1/8	Super type Pillar fitting integrated type		Super 300 type Pillar fitting J series integrated type		Super 300 type Pillar fitting P series integrated type		F-LOCK 20 series fitting integrated type	
			Ø3 X Ø2 tube connection	1/8" X 0.086" tube connection		Ø6 X Ø4 tube connection	1/4" X 5/32" tube connection	Ø6 X Ø4 tube connection	1/4" X 5/32" tube connection	Ø6 X Ø4 tube connection	1/4" X 5/32" tube connection	Ø6 X Ø4 tube connection	Ø6.35 X Ø4.3 tube connection
Symbol	Descriptions												
Ⓑ Orifice													
2	Ø2	●	●	●									
4	Ø4				●	●	●	●	●	●	●	●	●

●TMD3 Series

TMD302 - 12US - 10

Model No.

Ⓐ Connection

Ⓑ Orifice

		TMD3						
Ⓐ Connection								
		15	12US	15BUS	12UF	15BUF	12UA	15BUA
		Rc 1/2	Super type Pillar fitting integrated type		F-LOCK 20 series fitting integrated type		F-LOCK 20A series fitting integrated type	
			Ø12 X Ø10 tube connection	1/2" X 3/8" tube connection	Ø12 X Ø10 tube connection	1/2" X 3/8" tube connection	Ø12 X Ø10 tube connection	1/2" X 3/8" tube connection
Symbol	Descriptions							
Ⓑ Orifice								
10	Ø10		●	●	●	●	●	●
12	Ø12	●						

Dimensions

● RC thread type

·TMDZ02-6-2

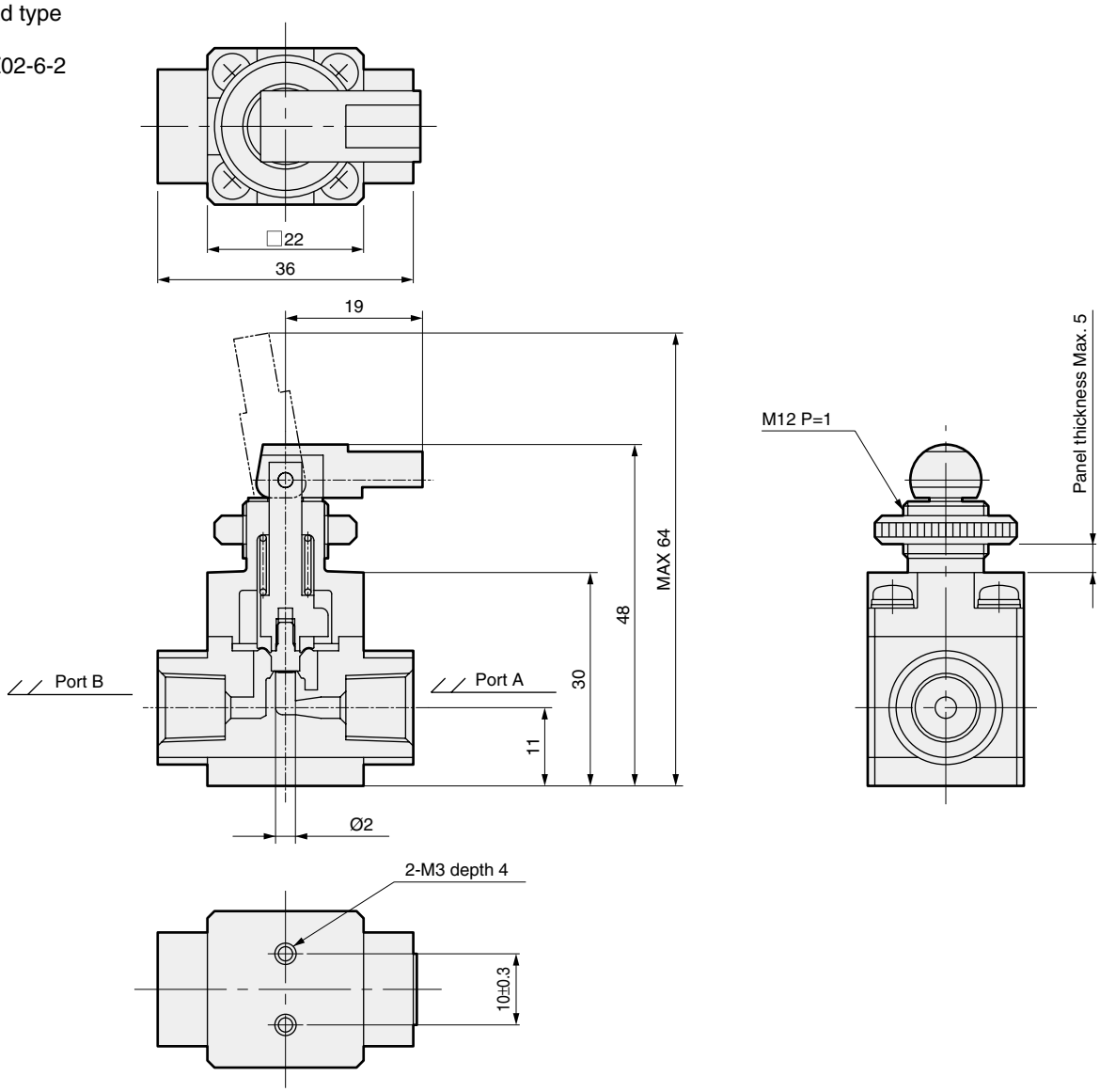

● Fitting integrated type

·TMDZ02-*1-2

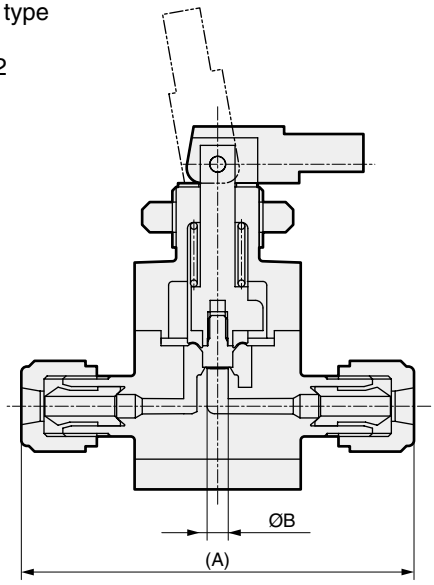

Dimension / *1 (Connection model No.)	A	B
3US	50	2
6BUS	50	2
3UF	40	2
3UR	57	1.6
6BUR	57	1.6

Dimensions

● RC thread type

·TMD002-6-4

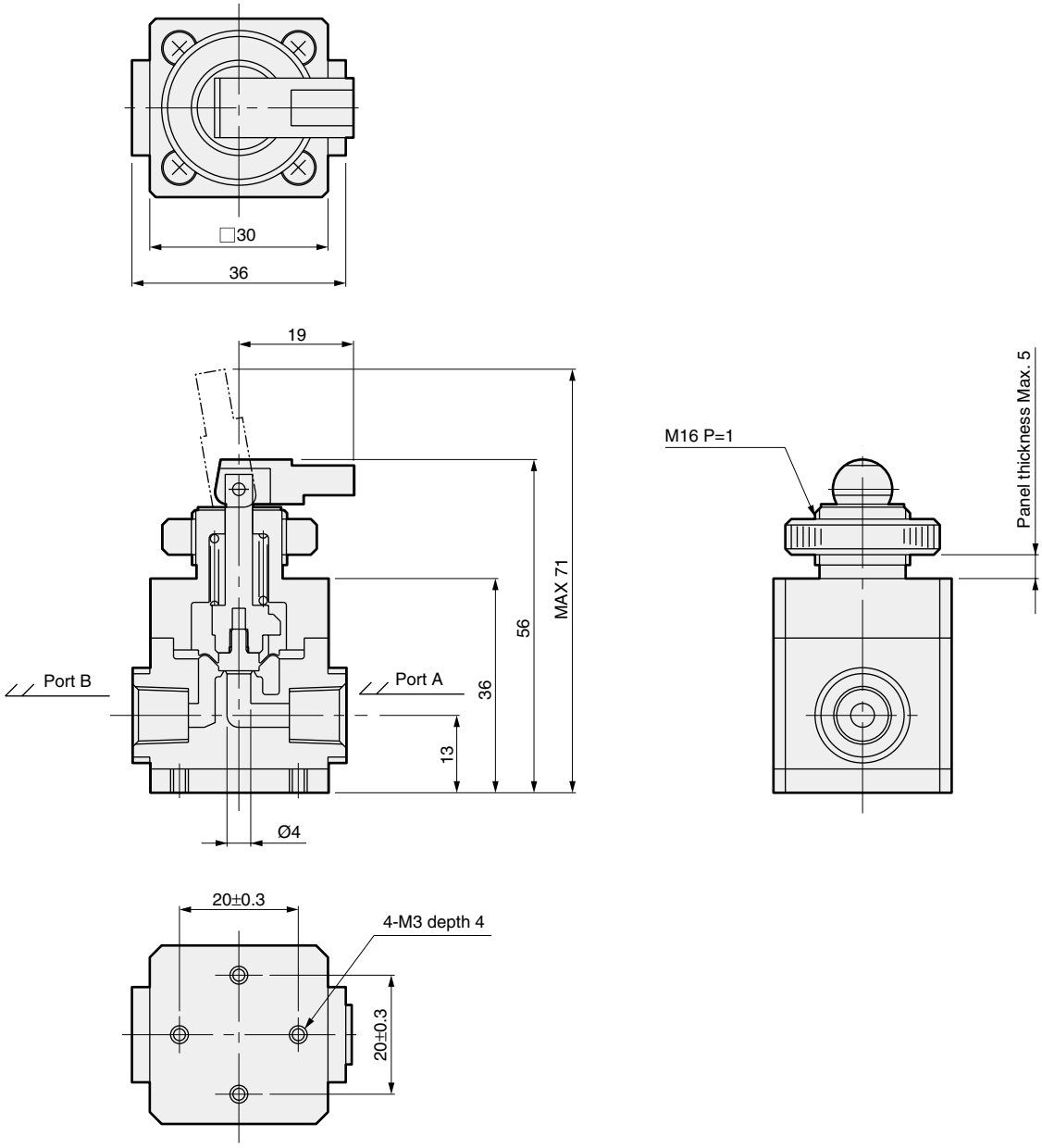

● Fitting integrated type

·TMD002-*1-4

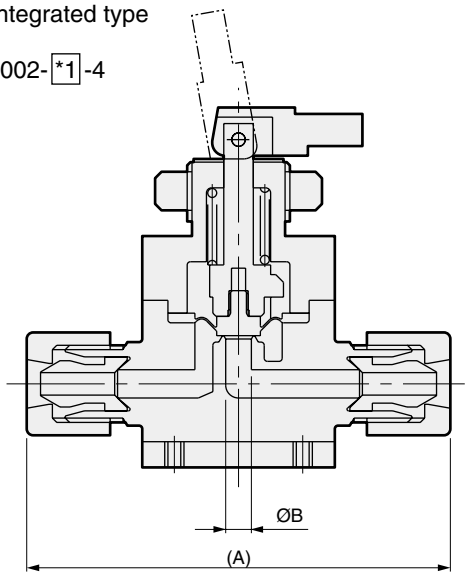

Dimension / *1 (Connection model No.)	A	B
6US	66	4
8BUS	66	4
6UJ	64	4
8BUJ	64	4
6UP	68	4
8BUP	68	4

Dimension / *1 (Connection model No.)	A	B
6UF	64	4
8BUF	64	4
6UR	90	3.5
8BUR	92	3.5
6UK	71	4
8BUK	71	4
8BUW	86	3

Dimensions

● RC thread type

·TMD302-15-12

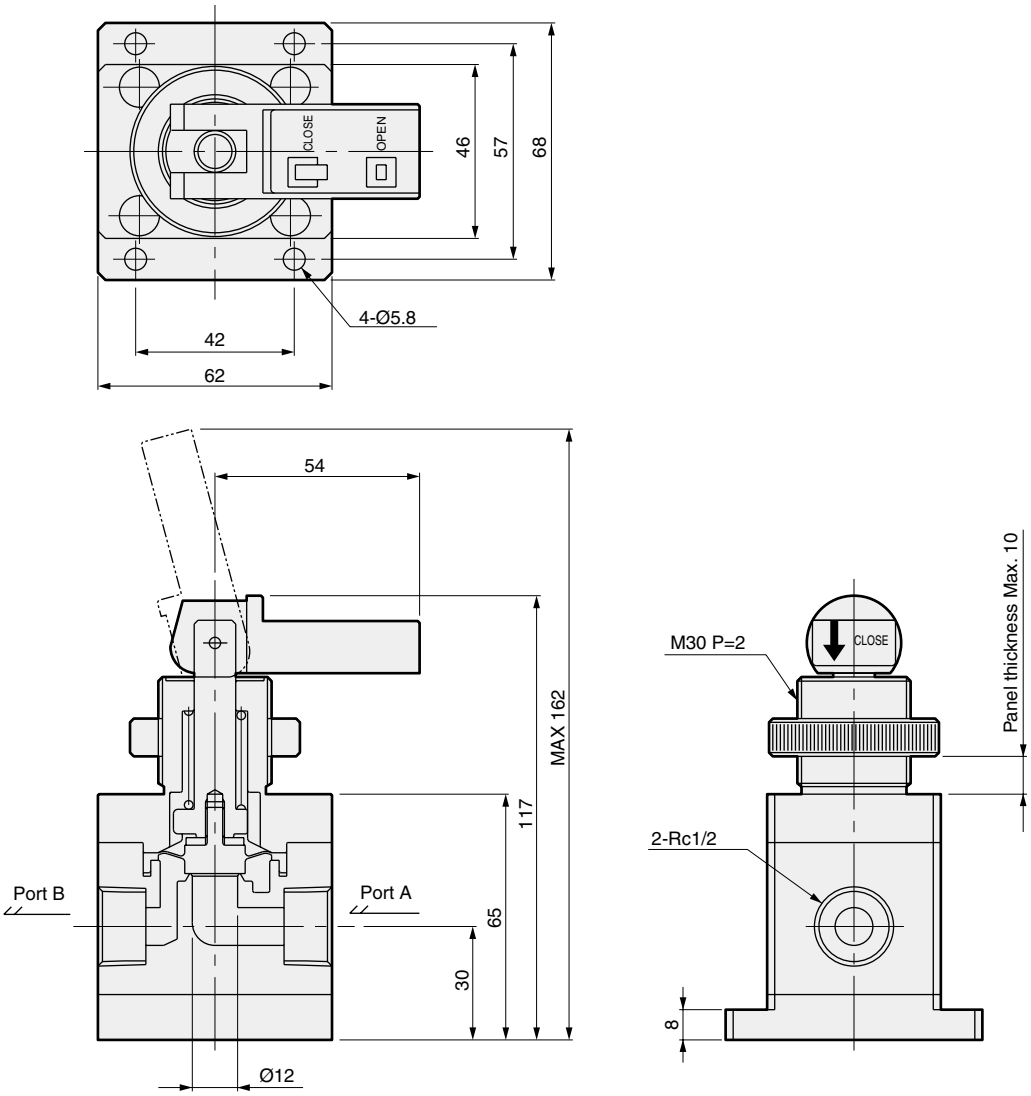

● Fitting integrated type

·TMD302-*1-10

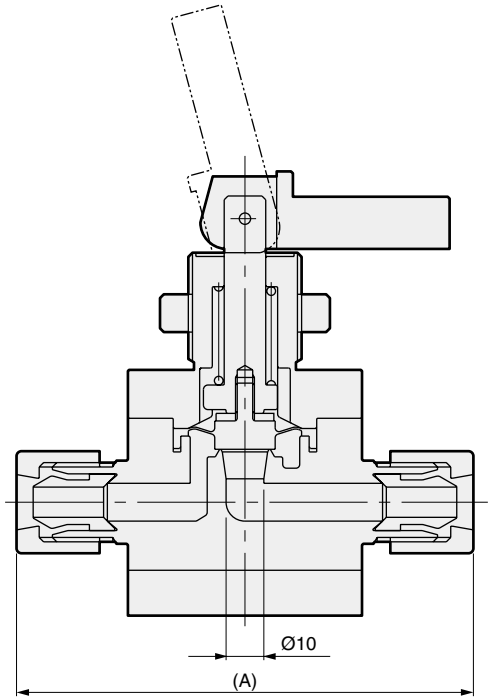

Dimension / *1 (Connection model No.)	A
12US	121
15BUS	121
12UF	112
15BUF	112
12UA	112
15BUA	112

AMS·AMDS·TQAS0

Overview

After the flow path closes, this valve leads fluid in at the end of the nozzle into the pipe to prevent fluid from dripping from the nozzle while the flow path is closed. Three valves types are used: discrete drip prevention , type integrated with air-operated valve for chemical liquids, and electronically controlled.

Features

Drip prevention valve AMS

- Compact, lightweight downsized valve
- PPS actuator material eliminates discoloration and melting caused by solvents
- Integrated fitting (molded PFA) eliminates particles.

Air-operated valve for chemical liquids and drip prevention valve integrated AMDS

- Integrated with air-operated valve for chemical liquids
  Piping work hours have been reduced, realizing a lighter, more compact valve.
- Improved corrosion resistance
  Fluorine resin is used for all wetted parts, enabling use with chemical liquids and pure water.
- Contamination and leak measures
  The integrated fitting eliminates leaks and fluid residue.

Electronically controlled drip prevention valve TQASO

- Intelligent
  The suction speed, suck-back rate and time, etc., are set as needed with electronic control. Gradual suction and fine adjustments are possible.
- Improved maintenance
  Operation of manual mode with the controller greatly reduces the number of setting work hours.

⚠ Precautions	Intro 7
Drip prevention valve (AMS)	108
Integrated air-operated valve for chemical liquid/ dip prevention valve (AMDS)	112
Electronic control drip prevention valve (TQAS0)	116

Drip prevention valve for chemical liquids

AMSZ2·AMS022 Series

Drip prevention valve for nozzle end control prevents dripping.

● Maximum suction rate: 0.04cm³/0.12cm³

CAD

Specifications

Descriptions		AMSZ2-*	AMS022-*
Working fluid		Chemical liquids, pure water	
Fluid temperature ˚C		5 to 80	
Withstanding pressure MPa		0.6	
Working pressure range MPa		0 to 0.2	
Ambient temperature ˚C		0 to 60	
Installation attitude		Side installation with port in vertical direction (OUT port upward)	
Connection		Rc1/8 ODØ3 tube connection OD1/8" tube connection	Rc1/8 ODØ6 tube connection OD1/4" tube connection
Operation section	Operation pressure MPa	0.3 to 0.5	
	Operation port	M5	
Maximum suction rate cm³		0.04	0.12

Usage examples and related products

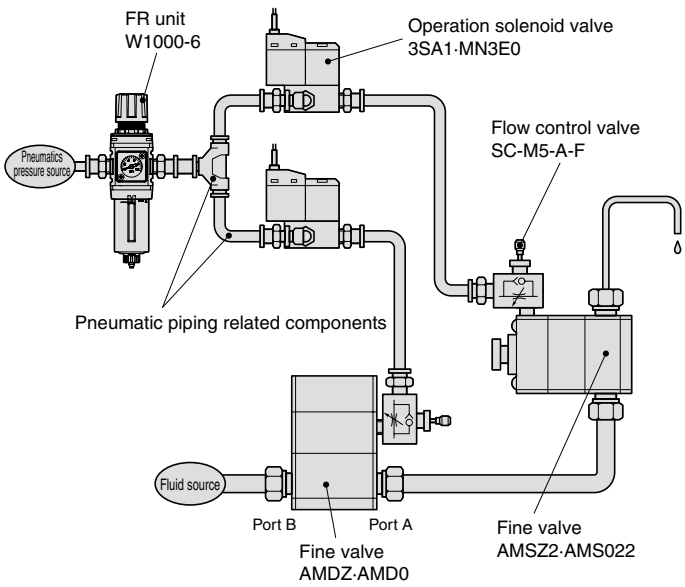

Refer to the General Pneumatic Catalog and Clean Component Catalog (Catalog No. CB-033S) for details on related products.

Internal structure and parts list

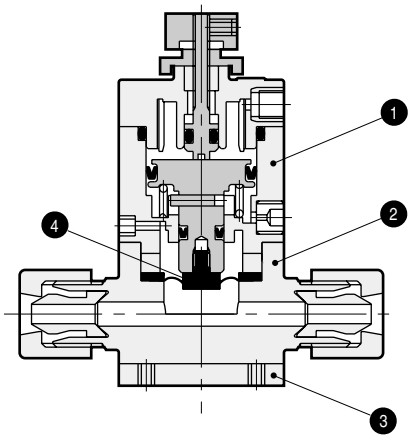

No.	Parts name	Material	Quantity
1	Actuator assembly	PPS	1
2	Body	PFA	1
3	Mounting plate	SUS	1
4	Diaphragm	PTFE	1

The material differs with the model. Contact CKD for details.

 ⚠ Read the precautions on pages 7 to 12 in the introduction before use.

How to order

● AMSZ Series

AMSZ2 - 6 - D

Model No. / Ⓐ Connection / Ⓑ Body material

Symbol	Content	Ⓐ Connection 6	3US	6BUS	3UF	3UR	6BUR
		Rc 1/8	Super type Pillar fitting integrated type		F-LOCK 20 series fitting integrated type	F-LOCK 60 series fitting integrated type	
			Ø3 X Ø2 tube connection	1/8" X 0.086" tube connection	Ø3 X Ø2 tube connection	Ø3 X Ø2 tube connection	1/8" X 1/16" tube connection
Ⓑ Body material							
Blank	PFA molded body or PTFE machined body	PTFE	PFA		PTFE	PTFE	
D	Stainless steel body	●					

● AMS0 Series

AMS022 - 8BUS - ( )

Model No. / Ⓐ Connection / Ⓑ Body material

Symbol	Content	Ⓐ Connection 6	6US	8BUS	6UJ	8BUJ	6UP	8BUP	6UF	8BUF	6UR	8BUR	6UK	8BUK	8BUW
		Rc 1/8	Super type Pillar fitting integrated type		Super 300 type Pillar fitting J series integrated type		Super 300 type Pillar fitting P series integrated type		F-LOCK 20 series fitting integrated type		F-LOCK 60 series fitting integrated type		Final lock fitting integrated type		FLARTEC fitting integrated type
			Ø6 X Ø4 tube connection	1/4" X 5/32" tube connection	Ø6 X Ø4 tube connection	1/4" X 5/32" tube connection	Ø6 X Ø4 tube connection	1/4" X 5/32" tube connection	Ø6 X Ø4 tube connection	Ø6.35 X Ø4.3 tube connection	Ø6 X Ø4 tube connection	1/4" X 5/32" tube connection	Ø6 X Ø4 tube connection	1/4" X 5/32" tube connection	1/4" X 5/32" tube connection
Ⓑ Body material															
Blank	PFA molded body or PTFE machined body	PTFE	PFA		PTFE		PTFE		PTFE		PTFE		PTFE		PTFE
D	Stainless steel body	●													

⚠ Note on model No. selection

Note 1: Consult with CKD when selecting an all resin actuator used with acidic fluids.

Operation principle

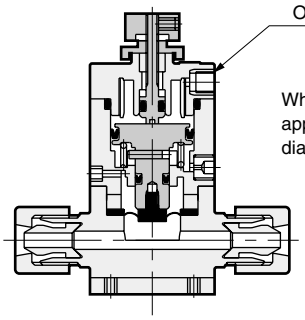

When fluids flow, pneumatic pressure is applied on the operation port, and the diaphragm is lowered.

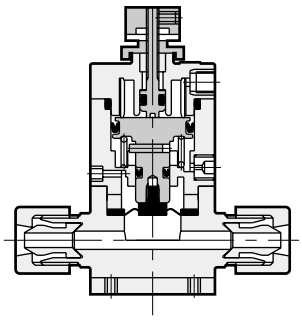

When fluid is stopped and air at the operation port is released into the atmosphere, the diaphragm rises with the force of the spring, and the volume in the drip prevention valve increases. This prevents fluid from dripping.

Dimensions

● Rc screw type

·AMSZ2-6/AMSZ2-6-D

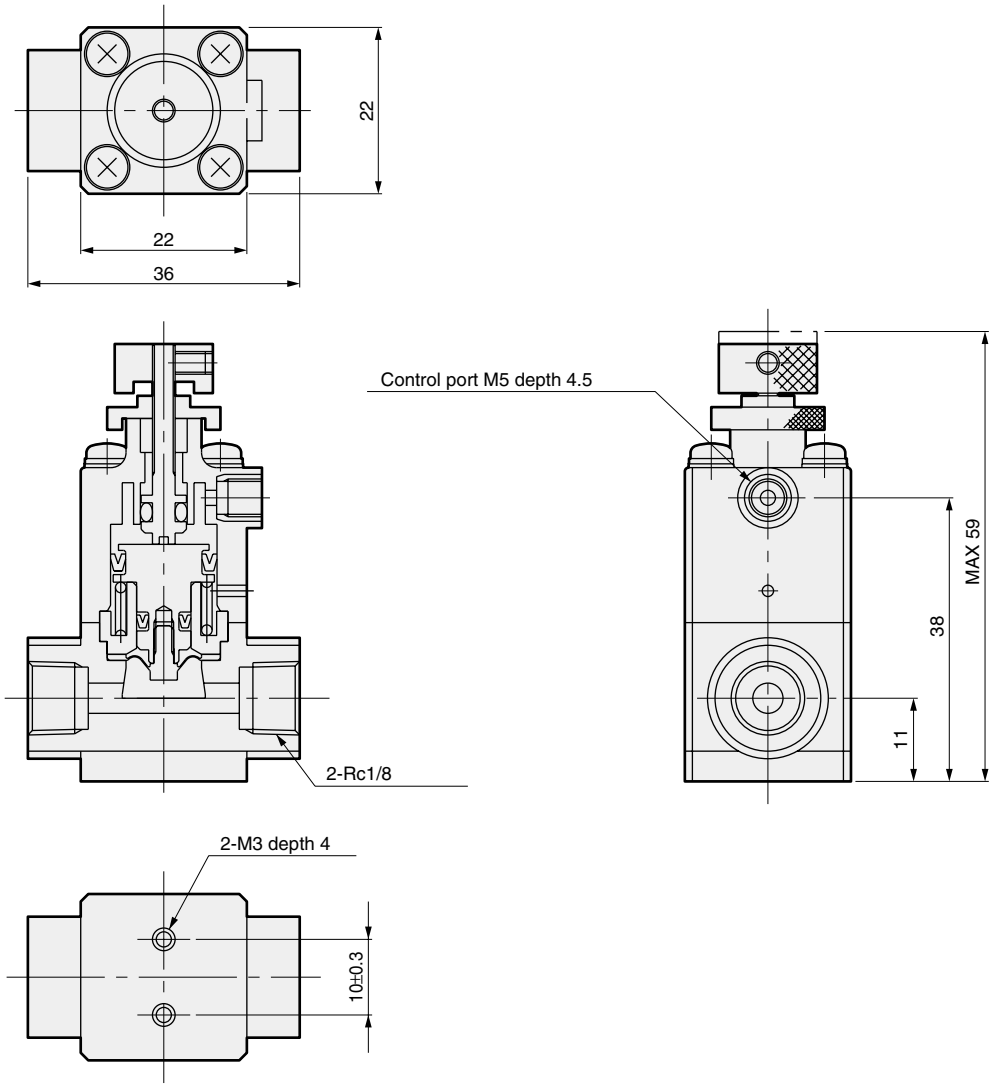

● Fitting integrated type

·AMSZ2-*1

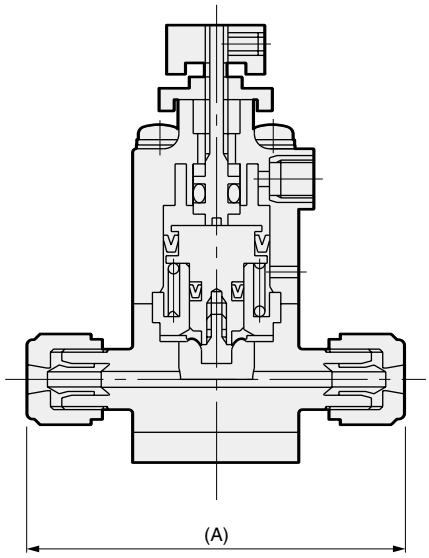

Dimension / *1 (Connection model No.)	A
3US	50
6BUS	50
3UF	40
3UR	57
6BUR	57

Dimensions

● Rc screw type

·AMS022-6/AMS022-6-D

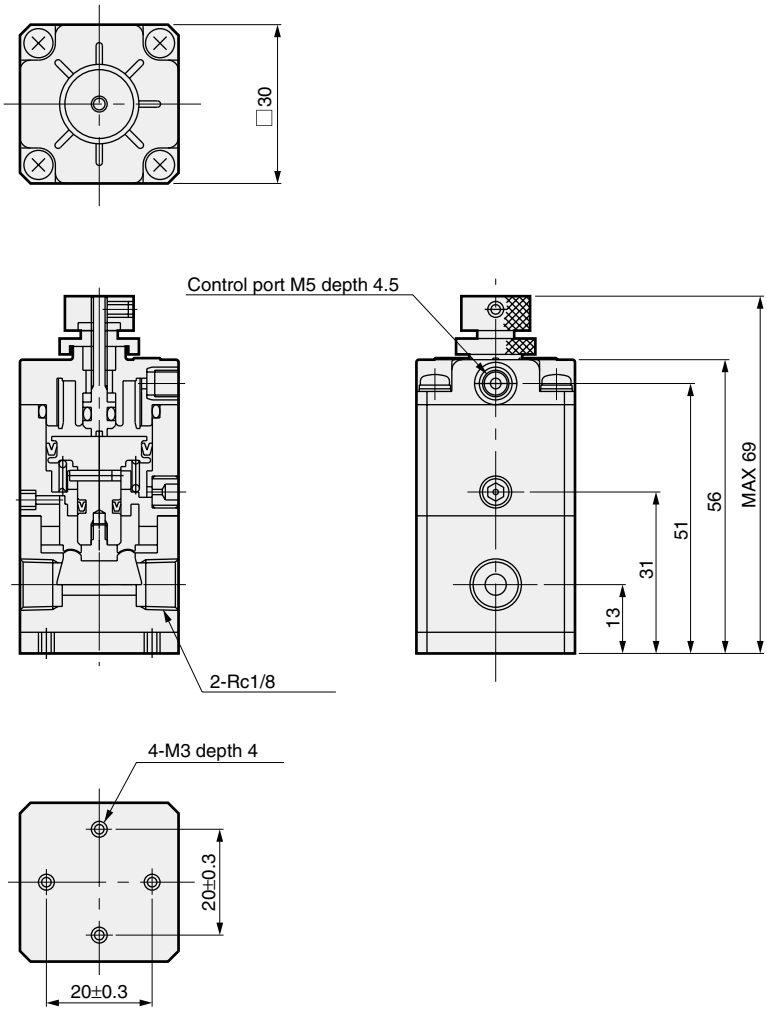

● Fitting integrated type

·AMS022- *1

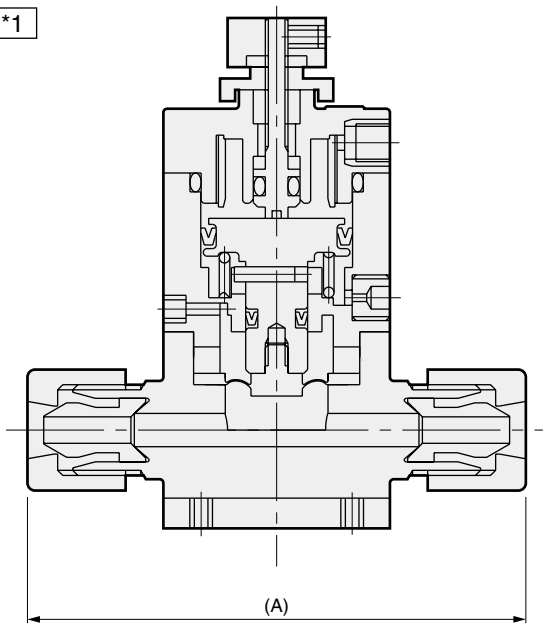

Dimension / *1 (Connection model No.)	A
6US	66
8BUS	66
6UJ	64
8BUJ	64
6UP	68
8BUP	68

Dimension / *1 (Connection model No.)	A
6UF	64
8BUF	64
6UR	90
8BUR	92
6UK	71
8BUK	71
8BUW	86

Integrated air-operated valve for chemical liquid/dip prevention valve

AMDSZ0·AMDS00 Series

Downsized valve with fewer piping work hours

● Maximum suction rate: 0.04cm³/0.12cm³

CAD

Specifications

Descriptions		AMDSZ0-*	AMDS00-*
Working fluid		Chemical liquids, pure water	
Fluid temperature ˚C		5 to 80	
Withstanding pressure MPa		0.6	
Working pressure range MPa		0 to 0.2	
Ambient temperature ˚C		0 to 60	
Installation attitude		Side installation with port in vertical direction (OUT port upward)	
Connection		ODØ3 tube connection OD1/8" tube connection	ODØ6 tube connection OD1/4" tube connection
Operation section	Operation pressure MPa	0.3 to 0.5	
	Operation port	M5	
Maximum suction rate cm³		0.04	0.12
Orifice		Ø2	Ø4
Cv value		0.08	0.32

Usage examples and related products

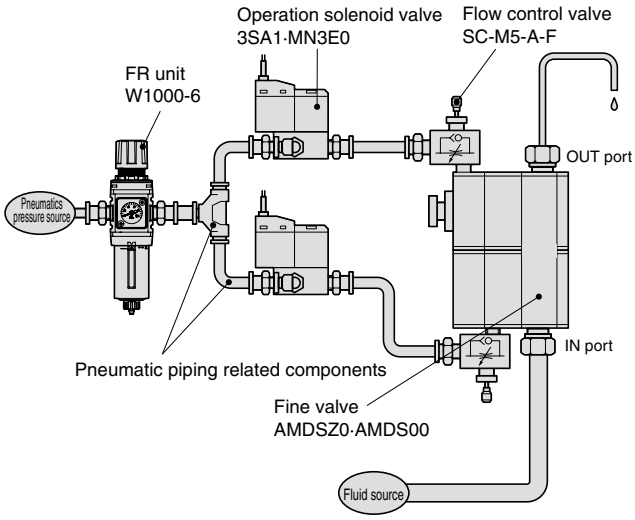

Refer to the General Pneumatic Catalog and Clean Component Catalog (Catalog No. CB-033S) for details on related products.

Internal structure and parts list

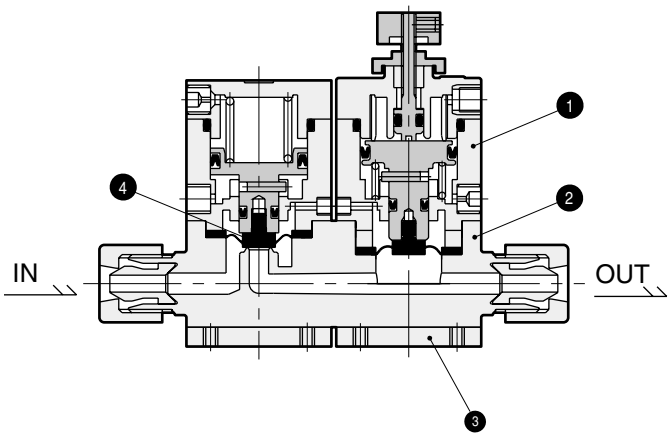

No.	Parts name	Material	Quantity
1	Actuator assembly	PPS	2
2	Body	PFA	1
3	Mounting plate	SUS	2
4	Diaphragm	PTFE	2

The material differs with the model. Contact CKD for details.

 ⚠ Read the precautions on pages 7 to 12 in the introduction before use.

How to order

●AMDSZ Series

AMDSZ0 - 3US

Model No.

Ⓐ Connection

Content	Ⓐ Connection				
	3US	6BUS	3UF	3UR	6BUR
	Super type Pillar fitting integrated type		F-LOCK 20 series fitting integrated type	F-LOCK 60 series fitting integrated type	
	Ø3 X Ø2 tube connection	1/8" X 0.086" tube connection	Ø3 X Ø2 tube connection	Ø3 X Ø2 tube connection	1/8" X 1/16" tube connection
Body material					
PFA molded body or PTFE machined body	PFA		PTFE	PTFE	

●AMDS0 Series

AMDS00 - 6UJ

Model No.

Ⓐ Connection

Content	Ⓐ Connection												
	6US	8BUS	6UJ	8BUJ	6UP	8BUP	6UF	8BUF	6UR	8BUR	6UK	8BUK	8BUW
	Super type Pillar fitting integrated type		Super 300 type Pillar fitting J series integrated type		Super 300 type Pillar fitting P series integrated type		F-LOCK 20 series fitting integrated type		F-LOCK 60 series fitting integrated type		Final lock fitting integrated type		FLARTEC fitting integrated type
	Ø6 X Ø4 tube connection	1/4" X 5/32" tube connection	Ø6 X Ø4 tube connection	1/4" X 5/32" tube connection	Ø6 X Ø4 tube connection	1/4" X 5/32" tube connection	Ø6 X Ø4 tube connection	Ø6.35 X Ø4.3 tube connection	Ø6 X Ø4 tube connection	1/4" X 5/32" tube connection	Ø6 X Ø4 tube connection	1/4" X 5/32" tube connection	1/4" X 5/32" tube connection
Body material													
PFA molded body or PTFE machined body	PFA		PTFE		PTFE		PTFE		PTFE		PTFE		PTFE

⚠ Note on model No. selection

Note 1: Consult with CKD when selecting an all resin actuator used with acidic fluids.
Note 2: The actuator soft-shut (diaphragm) type is used to reduce foaming and improve drip prevention. Contact CKD for details.

Dimensions

● Fitting integrated type

·AMDSZ0-*1

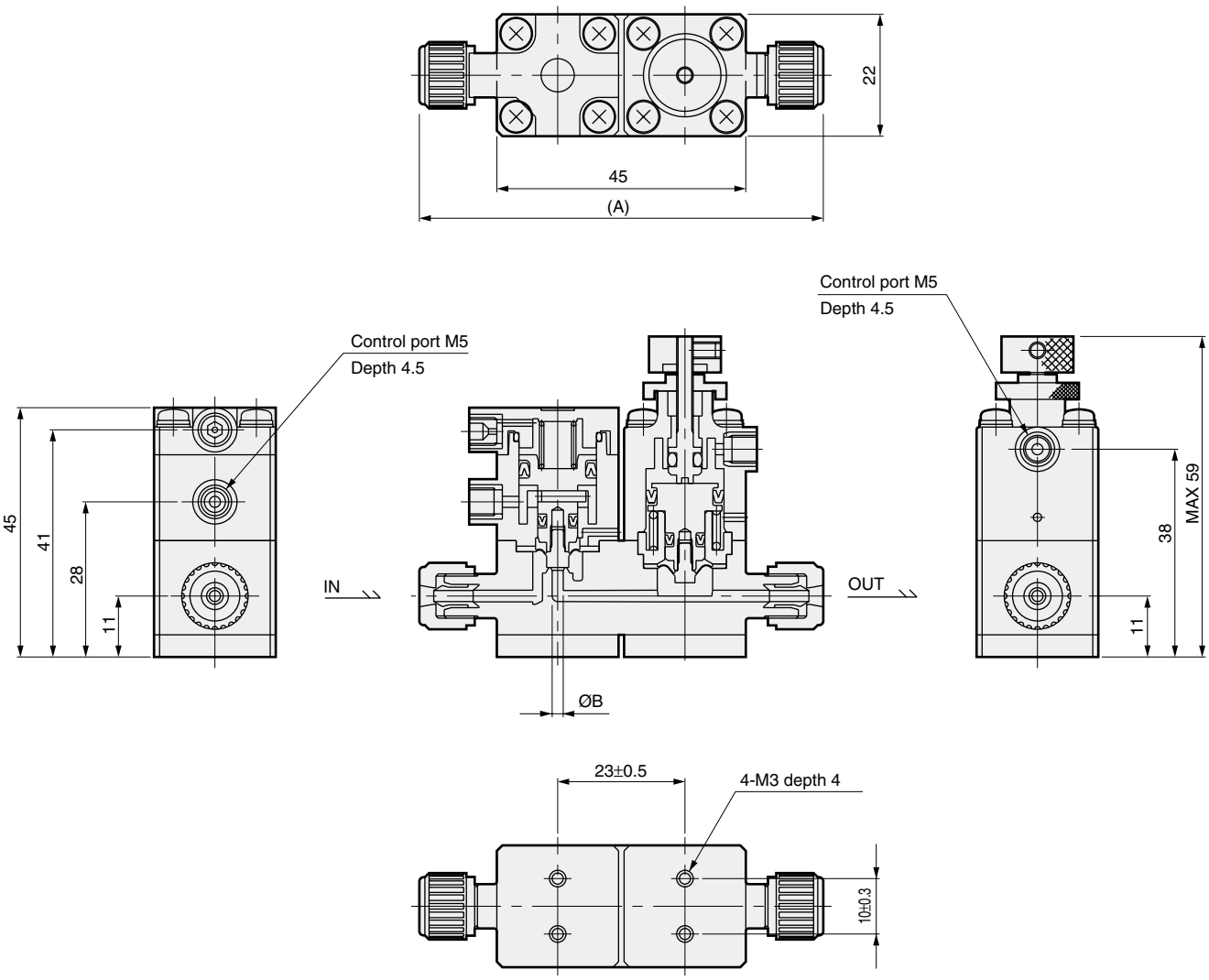

Dimension / *1 (Connection model No.)	A	B
3US	73	2
6BUS	73	2
3UF	63	2
3UR	80	1.6
6BUR	80	1.6

Dimensions

● Fitting integrated type

·AMDS00-*1

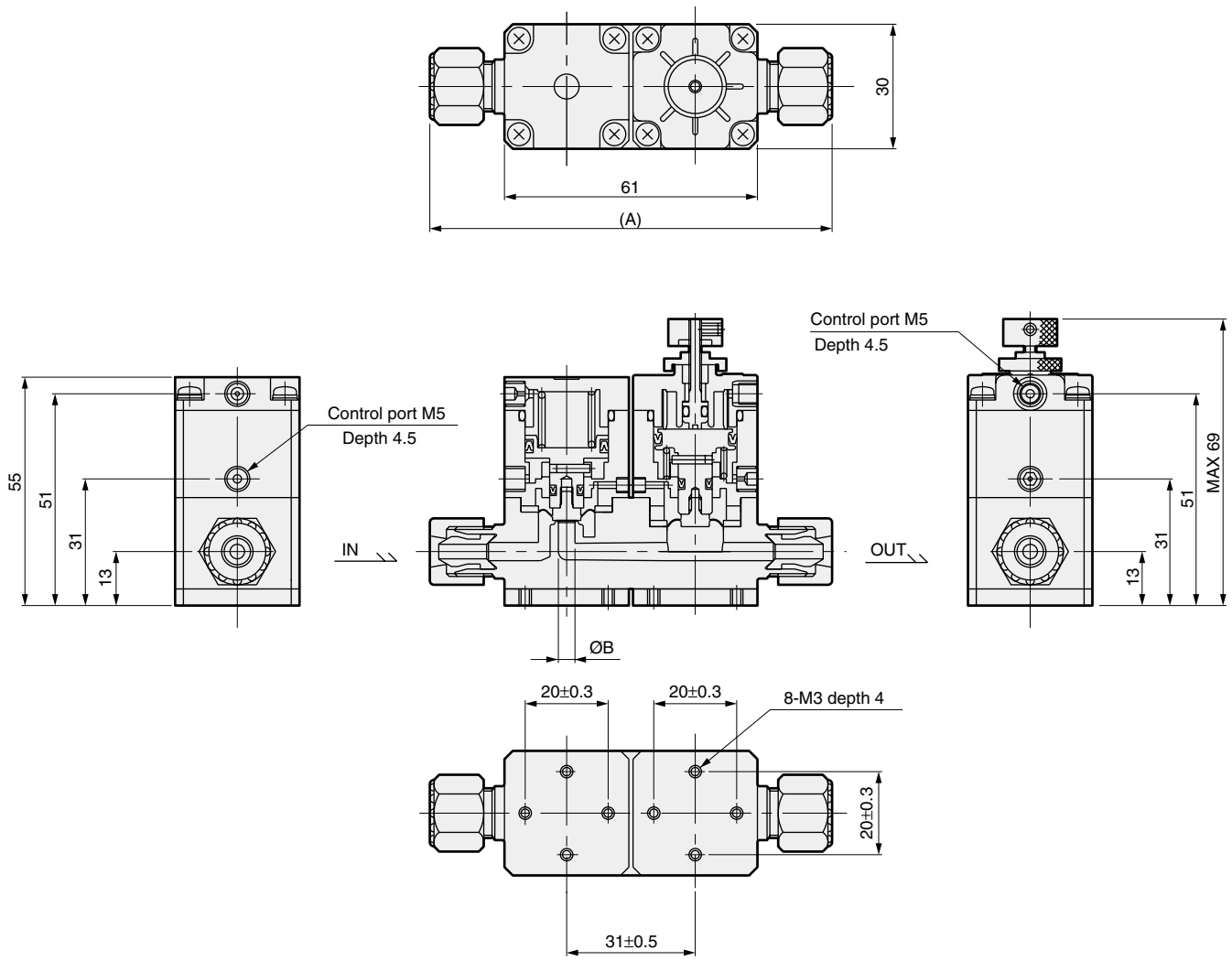

Dimension *1 (Connection model No.)	A	B
6US	97	4
8BUS	97	4
6UJ	95	4
8BUJ	95	4
6UP	99	4
8BUP	99	4
6UF	95	4
8BUF	95	4
6UR	121	3.5
8BUR	123	3.5
6UK	102	4
8BUK	102	4
8BUW	117	3

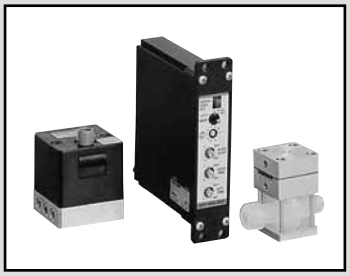

Automatic drip prevention unit

TQAS0 Series

Nozzle end suction control drip prevention enabling optimum drip prevention control

● Maximum suction rate: 0.05cm³

Specifications

Descriptions	TQAS0-*-5	TQAS0-*-20
Working fluid	Chemical liquids, pure water	
Fluid temperature ˚C	5 to 40	
Withstanding pressure MPa	0.6	
Working pressure range MPa	0 to 0.2	
Supply pressure range MPa	0.4 to 0.5 (electro-pneumatic regulator supply pressure)	
Input signal	24VDC	
Voltage	24VDC ±10% (lip ratio 1% or less)	
Current consumption	200 mA or less	
Ambient temperature ˚C	0 to 60	
Ambient humidity	85% or less	
Installation attitude	Side installation with port in vertical direction (OUT port upward)	
Connection	Rc1/8 ODØ6 tube connection OD1/4" tube connection	
Operation port	M5	
Maximum suction rate cm³	0.05	
Suction time Sec	0.2 to 5	0.2 to 20
Setup time Sec	0.2 to 2.5	

Usage example

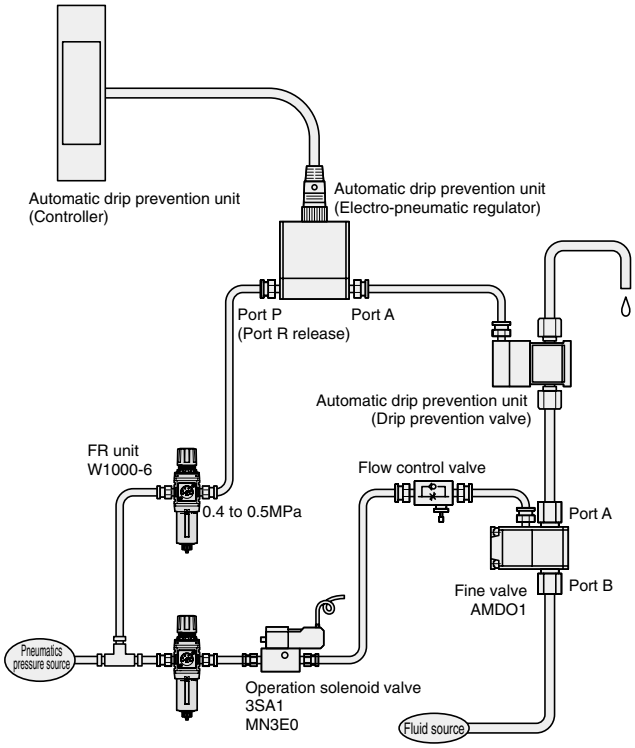

Internal structure and parts list

(Drip prevention valve section)

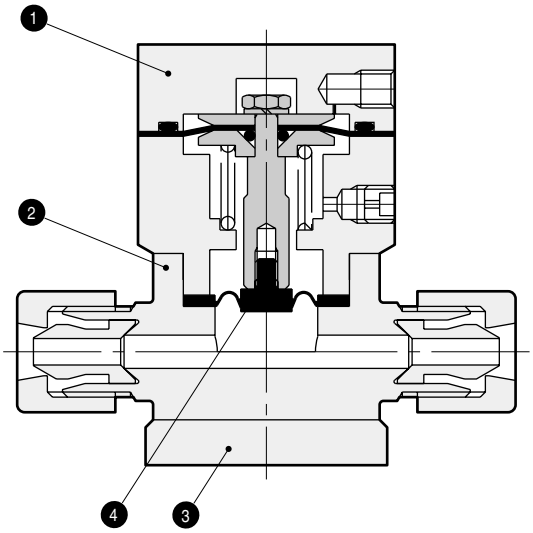

No.	Parts name	Material	Quantity
1	Actuator assembly	A5056	1
2	Body	PFA	1
3	Mounting plate	A5056	1
4	Diaphragm	PTFE	1

The material differs with the model. Contact CKD for details.

 ⚠ Read the precautions on pages 7 to 12 in the introduction before use.

How to order

TQAS0 - 8BUF - 5

Model No.

Ⓑ Suction time

Ⓐ Connection

Symbol	Content
Ⓑ Suction time	
5	5sec
20	20 sec

Ⓐ Connection													
6	6US	8BUS	6UJ	8BUJ	6UP	8BUP	6UF	8BUF	6UR	8BUR	6UK	8BUK	8BUW
Rc 1/8	Super type Pillar fitting integrated type		Super 300 type Pillar fitting J series integrated type		Super 300 type Pillar fitting P series integrated type		F-LOCK 20 series fitting integrated type		F-LOCK 60 series fitting integrated type		Final lock fitting integrated type		FLARTEC fitting integrated type
	Ø6 X Ø4 tube connection	1/4" X 5/32" tube connection	Ø6 X Ø4 tube connection	1/4" X 5/32" tube connection	Ø6 X Ø4 tube connection	1/4" X 5/32" tube connection	Ø6 X Ø4 tube connection	Ø6.35 X Ø4.3 tube connection	Ø6 X Ø4 tube connection	1/4" X 5/32" tube connection	Ø6 X Ø4 tube connection	1/4" X 5/32" tube connection	1/4" X 5/32" tube connection
PTFE	PFA		PTFE		PTFE		PTFE		PTFE		PTFE		PTFE

Operation principle

● Setup operation

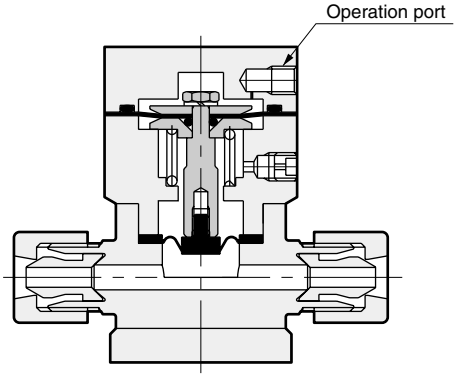

Air at the specified pressure is supplied to the operation port from the electro-pneumatic regulator, and the diaphragm is lowered and set at the desired speed.

● Drip prevention operation

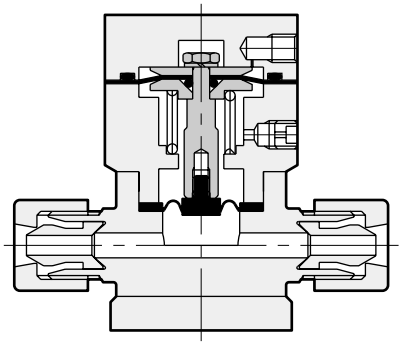

When pressure is reduced to the set pressure by the electro-pneumatic regulator, the diaphragm rises at the set speed to the set position, implementing drip prevention.
Suction is determined by the position where the supplied air pressure and spring force are balanced.
The diaphragm actuator eliminates all moving parts, and enables smooth movement with gradual suction.

Dimensions

● Rc screw type

·TQAS0-6-*

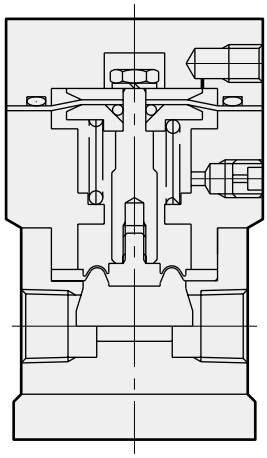

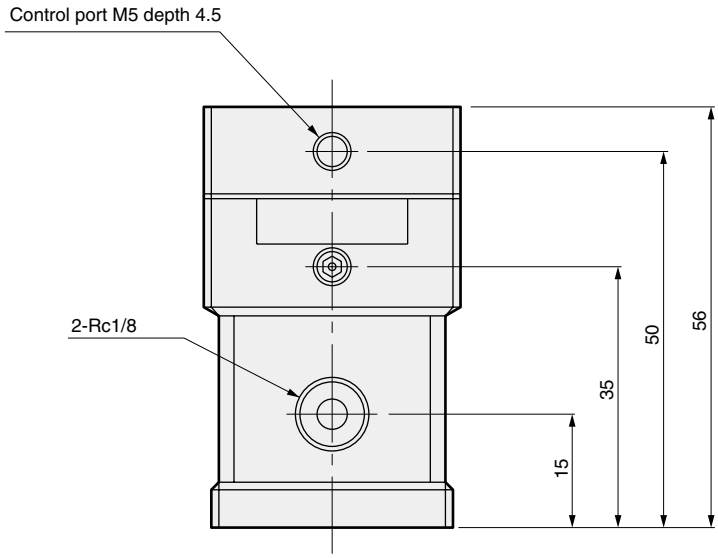

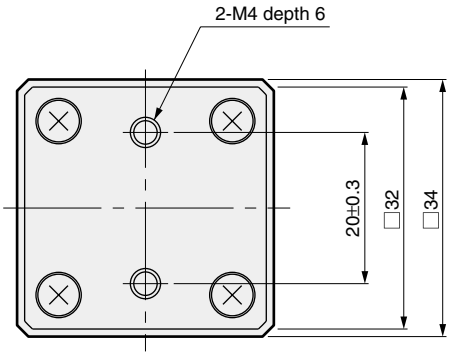

● Fitting integrated type

·TQAS0-*1-*

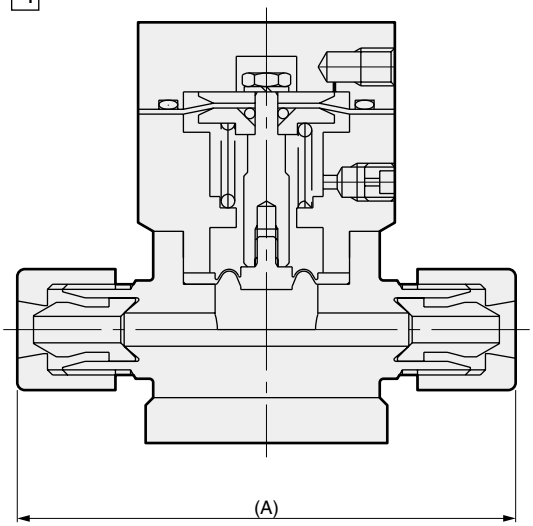

Dimension / *1 (Connection model No.)	A
6US	66
8BUS	66
6UJ	64
8BUJ	64
6UP	68
8BUP	68
6UF	64
8BUF	64

Dimension / *1 (Connection model No.)	A
6UR	90
8BUR	92
6UK	68
8BUK	68
8BUW	86

Dimensions

● Dedicated controller

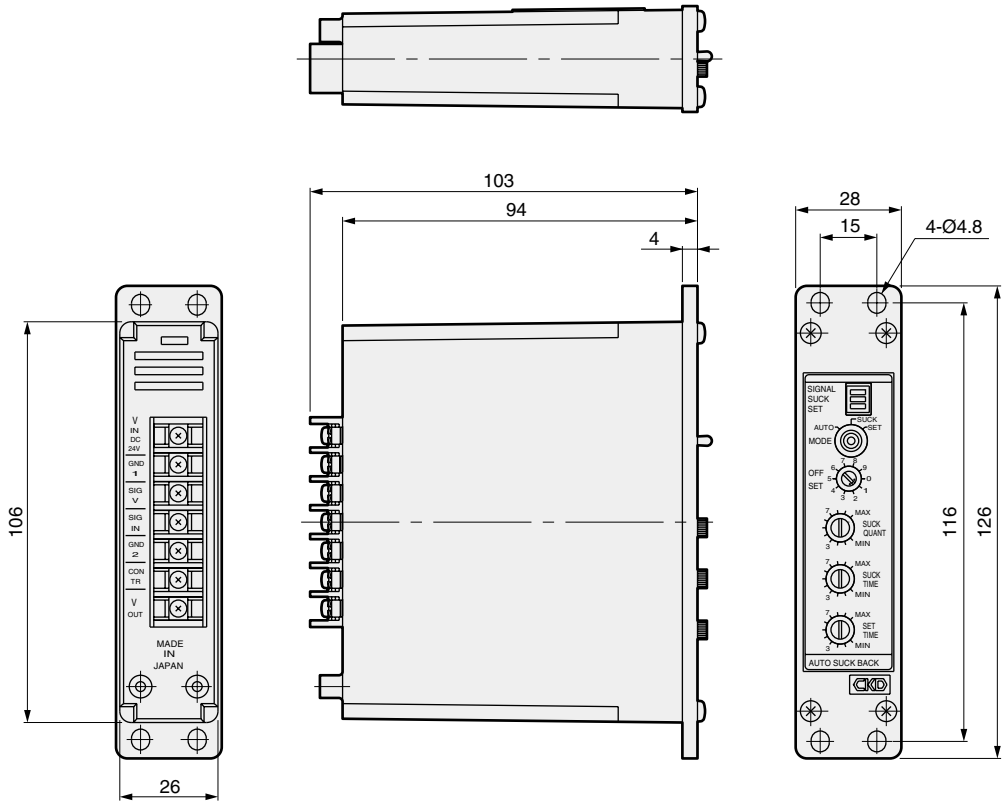

● Electro-pneumatic regulator

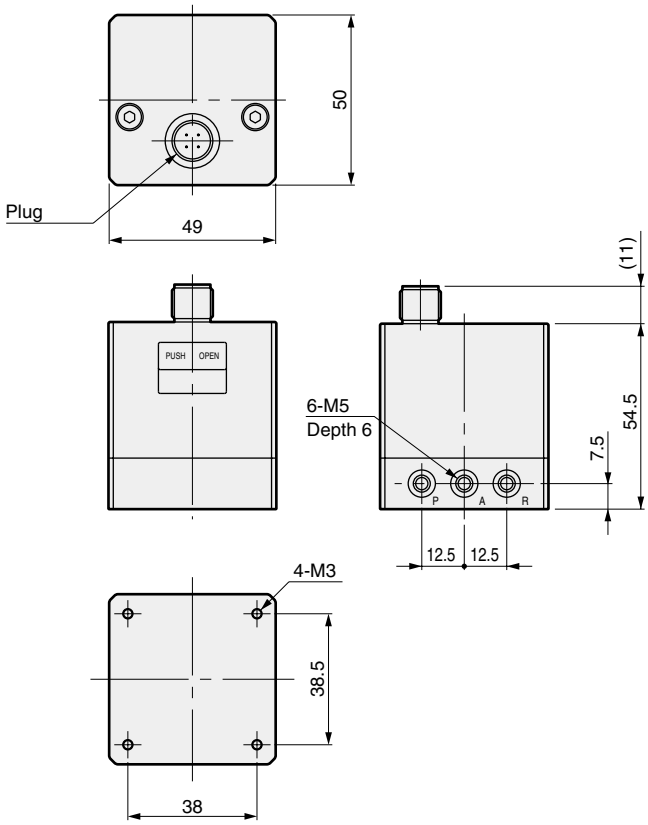

● Cable

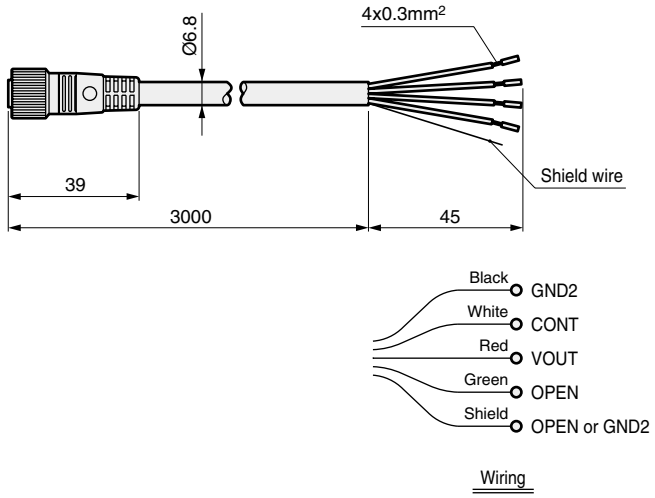

PYM/PMM10/PMM20

Overview

This regulator is used with pure water, chemical liquids, air, or N_2 gas. This has an outstanding corrosion resistance, and is installed easily. Select either a stainless steel or fluorine resin depending on your application.

Features

PYM (for air, N_2 gas and pure water)

- Stainless steel body, with fluorine resin (PTFE) and SUS316 wetted areas
- Internal filter
  Safety is enhanced by removing debris in fluid.

PMM10
(for pure water, chemical liquids, air and N2 gas)

- Fluorine resin body, with fluorine resin (PTFE) and SUS316 wetted materials
- Space-saving, compact
  Rectangular solid shape minimizes installation space and downsizes the unit.

PMM20 (for pure water)

- High corrosion resistance is attained with fluorine resin body, and all fluorine resin (PFA, PTFE) wetted areas.
- Contamination is prevented with integrated fittings.

⚠ Precautions	Intro 7
PYM stainless steel body	122
PMM10 PTFE body	124
PMM20 PFA body	126

Fine regulator

PYM Series

Stainless steel regulator for air, N_2 gas, and pure water

Specifications

Descriptions		PYM10-6	PYM10-8
Working fluid		Pure water, N_2 gas, air	
Fluid temperature	˚C	5 to 60	
Withstanding pressure	MPa	1.5	
Maximum working pressure	MPa	0.99	
Set pressure range	MPa	0.02 to 0.2 (Note 2)	
Ambient temperature	˚C	0 to 60	
Installation attitude		Free	
Port size and gauge ports port size		Rc1/8	Rc1/4

Note 1: Wetted material: PTFE, SUS316, nonrelief type
Note 2: Compatible with 0.02 to 0.4 MPa setting pressure range. Contact CKD for other applications.
Note 3: This valve is not used with acidic fluids.

Internal structure and parts list

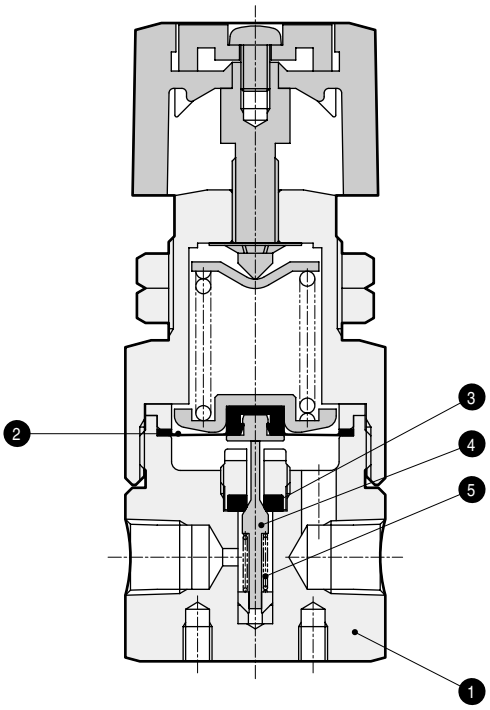

No.	Parts name	Material	Quantity
1	Body	SUS316	1
2	Diaphragm	PTFE	1
3	Valve disk	PTFE	1
4	Valve	SUS316	1
5	Spring	SUS316	1

How to order

PYM10 - 6

Fine regulator

Ⓐ Port size

Ⓐ Port size	
6	Rc1/8
8	Rc1/4

 ⚠ Read the precautions on pages 7 to 12 in the introduction before use.

Flow characteristics/pressure characteristics

Flow characteristics (water)

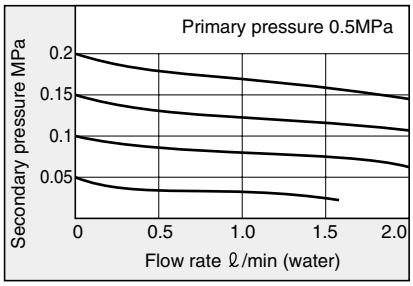

Flow characteristics (air)

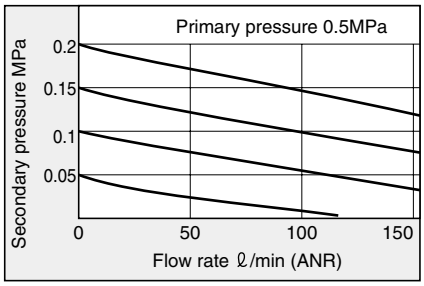

Pressure characteristics

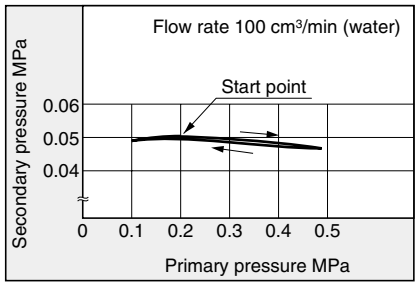

Dimensions

- PYM10-6 (Rc1/8)
- PYM10-8 (Rc1/4)

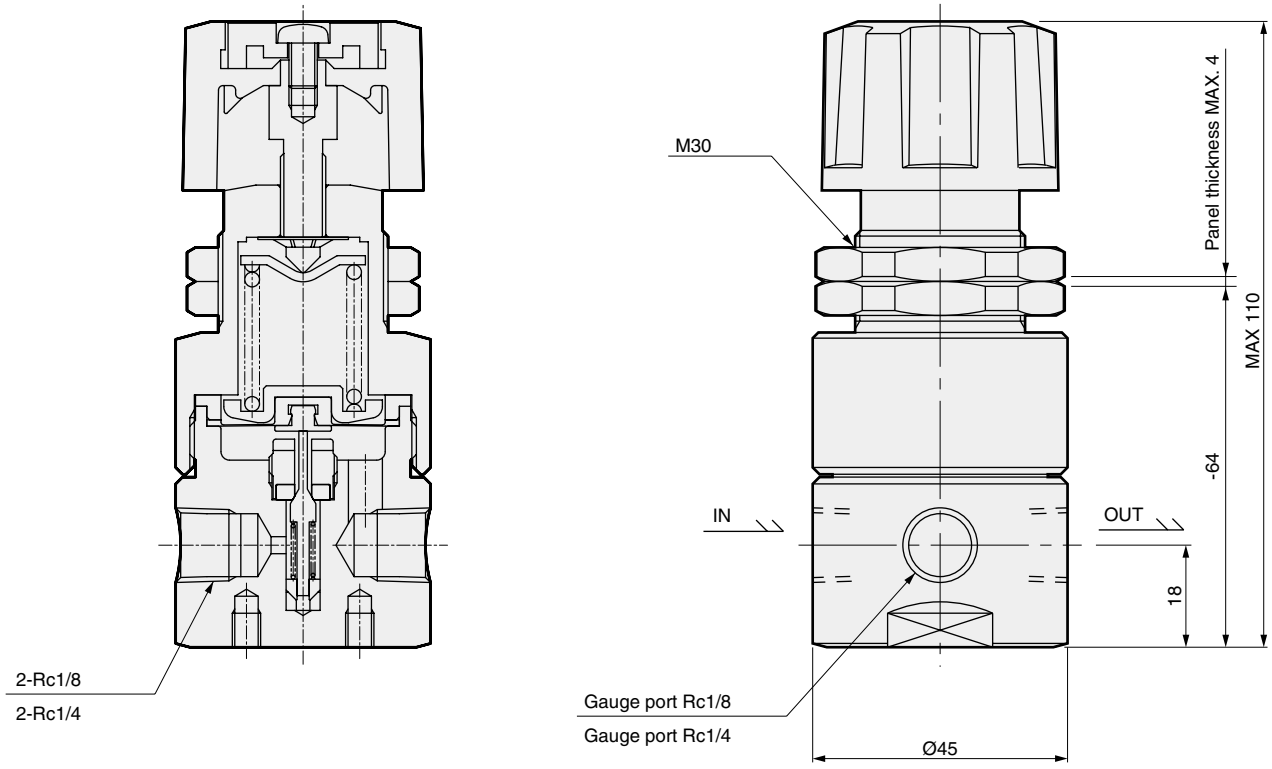

View P

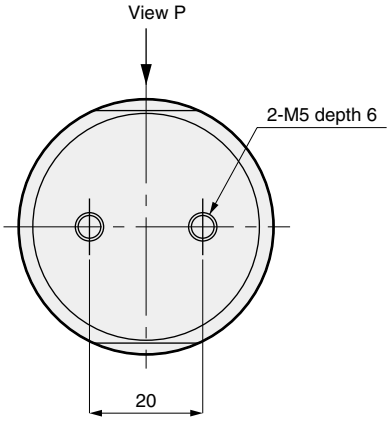

Fine regulator

PMM10 Series

PTFE regulator for air, N_2 gas, and pure water

Specifications

Descriptions	PMM10-6	PMM10-8
Working fluid	Chemical liquids, pure water, N_2 gas, air	
Fluid temperature ˚C	5 to 60	
Withstanding pressure MPa	0.75	
Maximum working pressure MPa	0.5	
Set pressure range MPa	0.02 to 0.2 (Note 2)	
Ambient temperature ˚C	0 to 60	
Installation attitude	Free	
Port size	Rc1/8	Rc1/4

Note 1: Wetted material: PTFE, SUS316, nonrelief type
Note 2: Compatible with 0.02 to 0.4 MPa setting pressure range. Contact CKD for other applications.
Note 3: This valve is not used with acidic fluids.

Internal structure and parts list

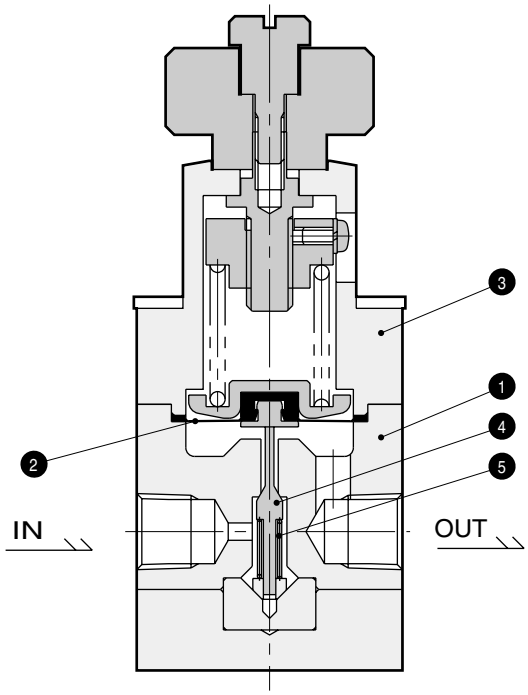

No.	Parts name	Material	Quantity
1	Body	PTFE	1
2	Diaphragm	PTFE	1
3	Actuator assembly	CPVC	1
4	Valve	SUS316	1
5	Spring	SUS316	1

How to order

PMM10 - 6

Fine regulator

Ⓐ Port size

Ⓐ Port size	
6	Rc1/8
8	Rc1/4

 ⚠ Read the precautions on pages 7 to 12 in the introduction before use.

Flow characteristics/pressure characteristics

Flow characteristics (water)

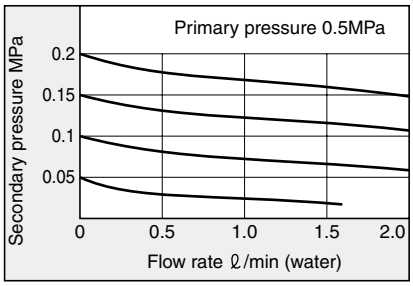

Flow characteristics (air)

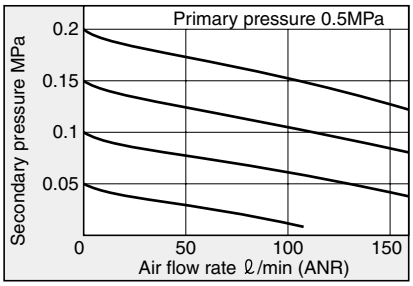

Pressure characteristics

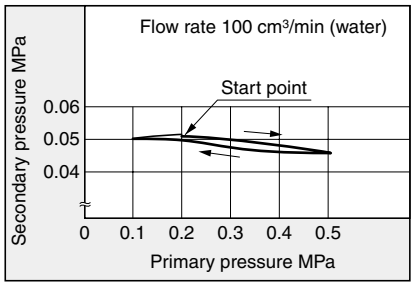

Dimensions

- PMM10-6 (Rc1/8)
- PMM10-8 (Rc1/4)

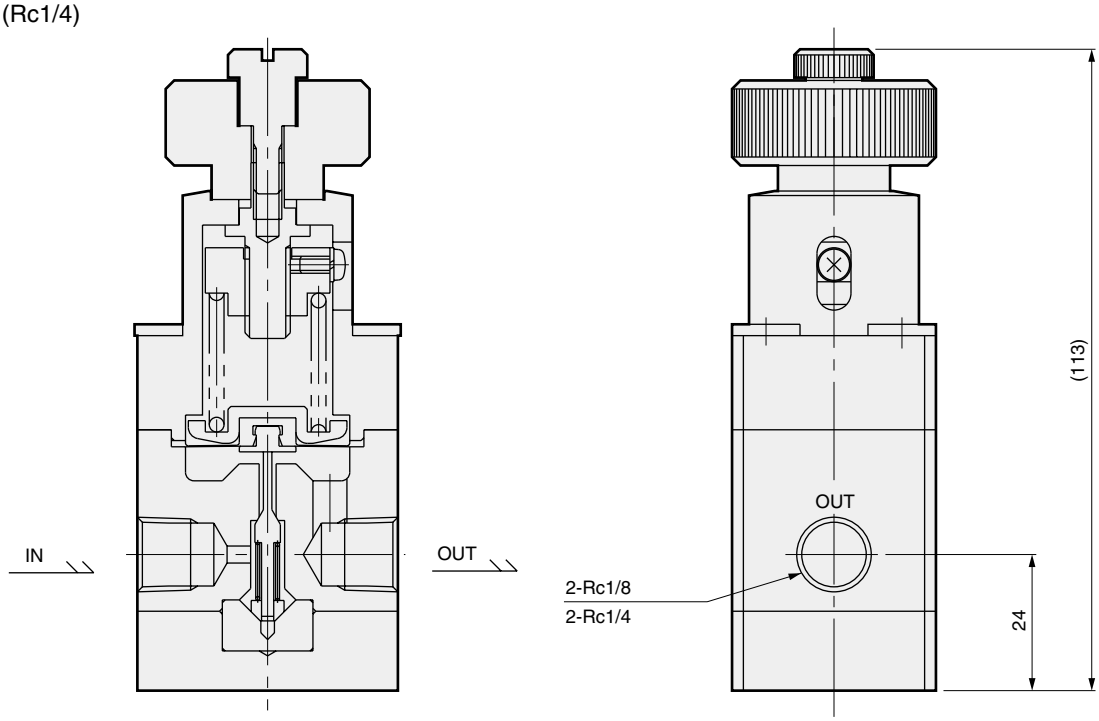

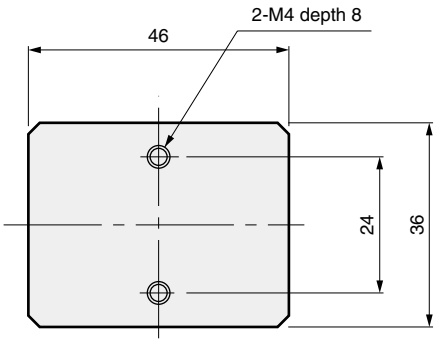

Fine regulator

PMM20 Series

Pure water regulator with fluorine resin wetted areas

Specifications

Descriptions	PMM20
Working fluid	Pure water
Fluid temperature ˚C	5 to 80
Withstanding pressure MPa	0.75
Maximum working pressure MPa	0.5
Set pressure range MPa	0.02 to 0.2 (Note 3)
Ambient temperature ˚C	0 to 60
Installation attitude	Free
Connection	OD Ø10 tube connection (fitting integrated type), OD3/8" (fitting integrated type)

Note 1: Nonrelief type
Note 2: Panel installation possible.
Note 3: 0.05 to 0.4 MPa setting pressure range indicated with "-H" at the end of the model name. Contact CKD for details.

Internal structure and parts list

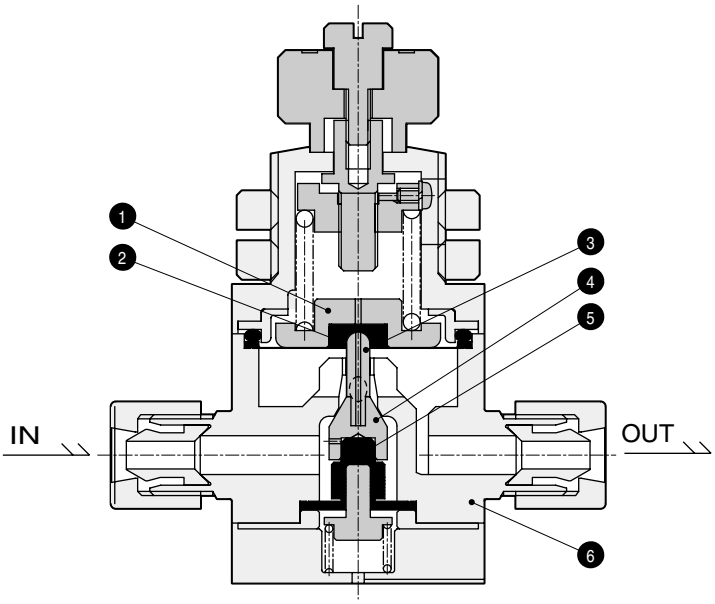

No.	Parts name	Material	Quantity
1	Spring rest	SUS316	1
2	Diaphragm	PTFE	1
3	Stem	PCTFE	1
4	Valve	PTFE	1
5	Bellows	PTFE	1
6	Body	PFA	1

How to order

PMM20 - 10BUS

Fine regulator — Ⓐ Connection

Note on model No. selection

Note 1: fittings other than those on the right are also available.
Contact CKD for details.

Ⓐ Connection	8US	10US	10BUS	10UJ	10BUJ	10UP	10BUP	10UA	10BUA	10UR	10BUR	10UK	10BUK	10BUW
	Super type Pillar fitting integrated type			Super 300 type Pillar fitting J series integrated type		Super 300 type Pillar fitting P series integrated type		F-LOCK 20A series fitting integrated type		F-LOCK 60 series fitting integrated type		Final lock fitting integrated type		FLARTEC fitting integrated type
	Ø8 X Ø6 tube connection	Ø10 X Ø8 tube connection	3/8" X 1/4" tube connection	Ø10 X Ø8 tube connection	3/8" X 1/4" tube connection	Ø10 X Ø8 tube connection	3/8" X 1/4" tube connection	Ø10 X Ø8 tube connection	3/8" X 1/4" tube connection	Ø10 X Ø8 tube connection	3/8" X 1/4" tube connection	Ø10 X Ø8 tube connection	3/8" X 1/4" tube connection	3/8" X 1/4" tube connection
Content														
Body material (Note 1)														
PFA molded body or PTFE machined body	PFA			PTFE		PTFE		PTFE		PTFE		PTFE		PTFE

 Read the precautions on pages 7 to 12 in the introduction before use.

Flow characteristics/pressure characteristics

Flow characteristics (water)

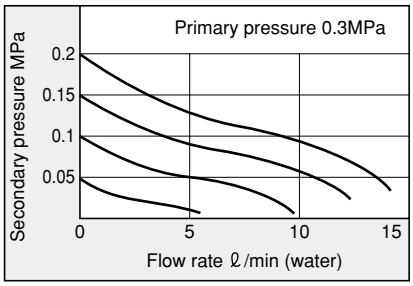

Pressure characteristics 1 (water)

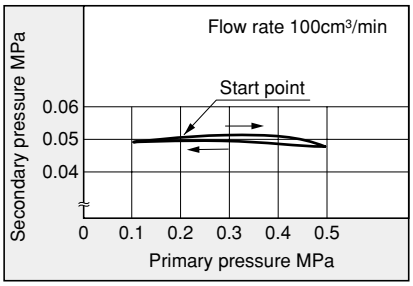

Pressure characteristics 2 (water)

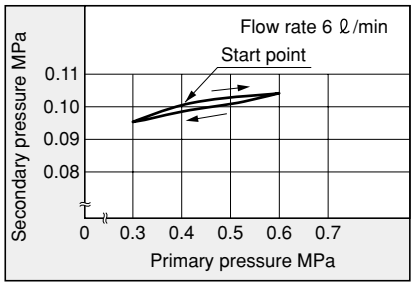

Dimensions

● PMM20-*1

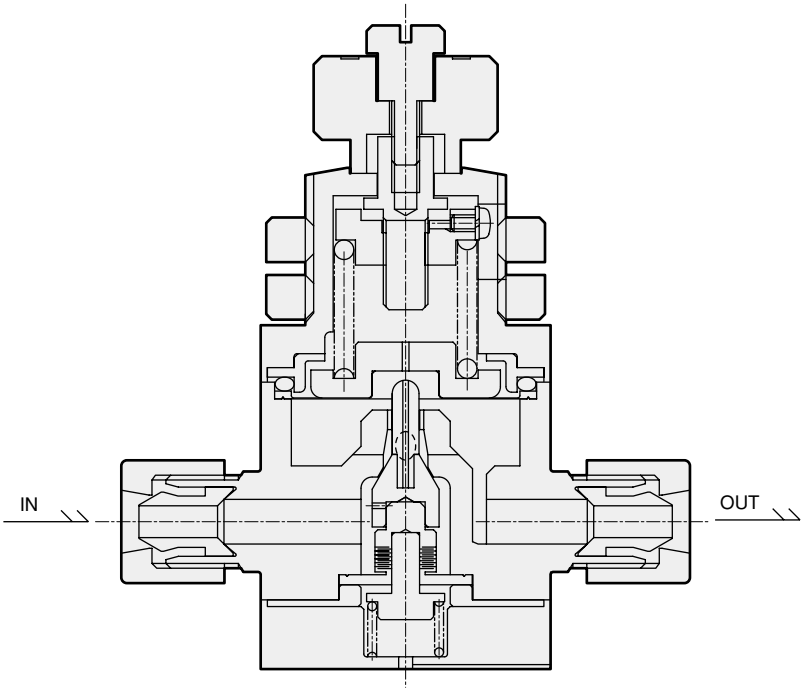

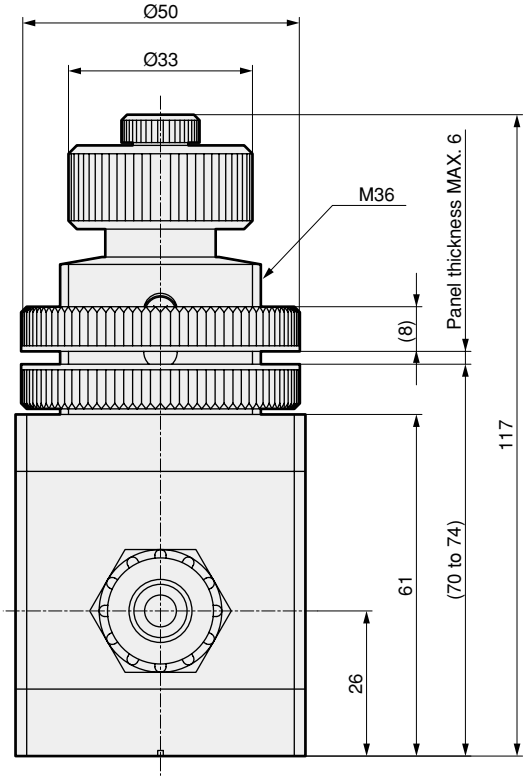

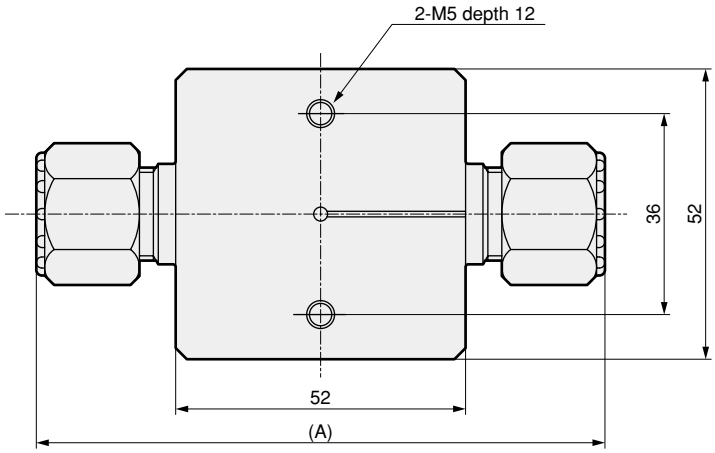

Dimension / *1 (Connection model No.)	A
8US	94
10US	102
10BUS	102
10UJ	98
10BUJ	98
10UP	102
10BUP	102
10UA	94
10BUA	94
10UR	126
10BUR	130
10UK	112
10BUK	112
10BUW	117

KML70/60/50

Overview

This switch accurately detects the level of corrosive fluids including pure water, acids, alkalis, and solvents, and outputs electrical signals.

Features

KML70

- Detection points: 8 points
- Remote operation
  The separate sensor and display enable the display to be installed away from the fluid tank and operation. Internal communication (RS485) enables operation from a host computer.
- Resistant to environmental pressure fluctuation
  The differential pressure section detects differences in environmental pressure and water level, enabling detection resistant to environmental pressure fluctuations to be used with the same pressure environment for the detection tube and environment detection tube.
- Detection flow setting not required

KML60

- Detection points: 4 points or 6 points settable
- A mixed manifold is established when used with KML50 (1-point detection type).
- The internal fixed orifice eliminates the need to set the detection flow.

KML50

- Highly accurate level detection (±1 mm)
- Outstanding installation performance
- Models with high corrosion-resistant materials are selected based on the ambient atmosphere.

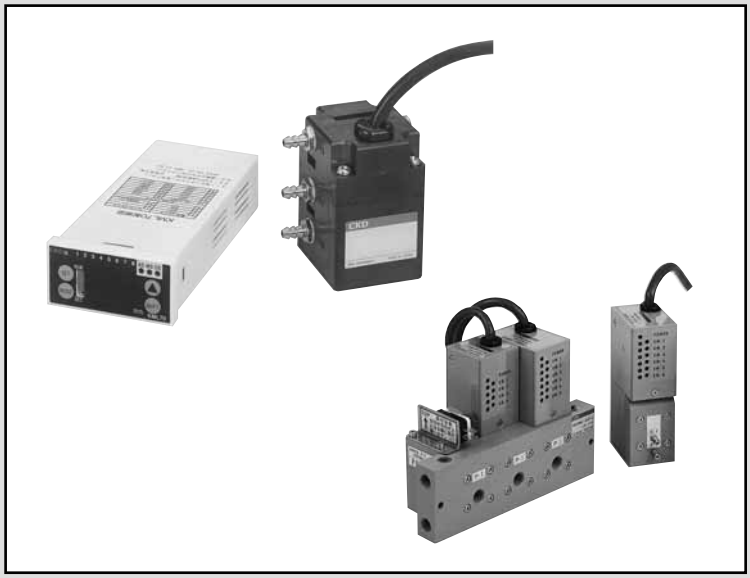

⚠ Precautions	Intro 7
KML70	130
KML60	134
KML50	138

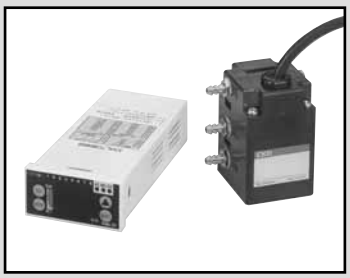

Digital fine level switch

KML70 Series

Detection flow setting not required
Resistant to environmental pressure fluctuations (differential pressure)
Internal communication function (RS485) for remote operation

Specifications

Descriptions	KML70-G-485		KML70-D-485
Detection type	Gauge pressure method		Differential pressure method
Working fluid	*1 Clean air, N_2		
Supply pressure range kPa	10 to 30		
Supply fluid temperature ˚C	5 to 50		
Ambient temperature ˚C	5 to 50		
Withstanding pressure kPa	Supply pressure	100	
	Detection pressure	10	
Detected water level range mm	*2 1 to 700		
Environmental pressure fluctuation range kPa	-		Within ±3 (detection tube and environment detection tube must be at same pressure environment)
Consumption flow rate Ncm^3/min	70 or less		140 or less
Monitor output	4 to 20MA DC (load resistance 200 to 550Ω)		
Power supply voltage	24V DC ±10% ripple (p-p) 1% or less		
Current consumption mA	130 or less (at 24VDC)		
Output type	8-point NPN open collector (CH1 to CH6 a contact, CH7 to CH8 b contact)		
Output rating	30VDC 50mA or less		
Insulation resistance MΩ	100 or more (500VDC for one minute)		
Withstand voltage	Commercial frequency 500VAC for one minute		
Repeatability mm	*2 ±3 (10 minutes or more after power ON)		
Hysteresis mm	*2 1 to 10 setting		
Response speed ms	600 or less (at supply pressure 20kPa, detection tube inner diameter Ø4mm, length 5m)		
Temperature characteristics mm/˚C	Within ±1.2 (detected fluid: water)		
Detection tube ID size mm	4		
Detection tube length m	Within 5		

*1 Use fluids filtered with a 0.3 m or higher performance filter.
*2 The above specifications are for fluid pressure 20 kPa, power voltage 24 VDC, ambient temperature 20˚C, detection piping bore Ø4 x length 5 m, specific gravity setting 1 and nozzle installation height 0. The detected fluid is water.

⚠ Precautions

1. Install the switch at a position higher than the level to be detected.
2. Use a Ø4 mm ID size piping for detection. Do not install anything that may cause resistance, such as an aperture, in piping.
3. This switch cannot be used in a sealed fluid tank or similar fluid tank.
4. Do not block detection piping or detection port with a valve, etc. Supply pressure applied to the sensor chip may result in damage.
5. Use compressed air filtered for dirt and oil with a submicron filter or microalescer.
6. Do not stop pressure supply. Chemical liquid may flow back from the detection tube to the sensor, with adverse effects.
7. The EXH port is left open when using gauge pressure. Do not block with a plug, etc.
8. This switch cannot be used in a chemical liquid environment.

Piping example

● Gauge pressure method

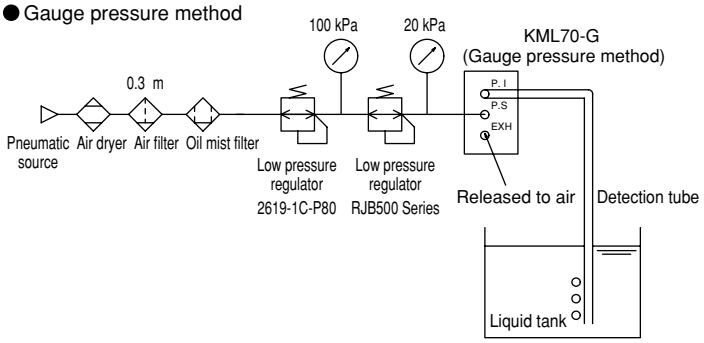

● Differential pressure method

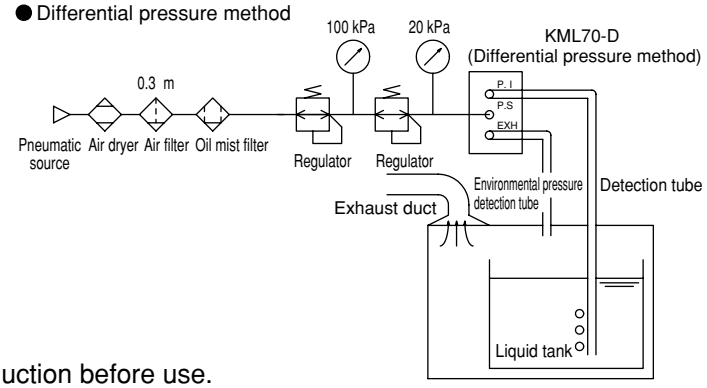

 ⚠ Read the precautions on pages 7 to 12 in the introduction before use.

How to order

● Discrete

KML70 - G - 485 - ( )

Model No.

Ⓐ Detection type

Ⓑ Communication

Ⓒ Sensor cable length

Symbol		Descriotion
Ⓐ	G	Gauge pressure method
	D	Differential pressure method
Ⓑ	485	RS485 communication
Ⓒ	Blank	Sensor cable 5m
	3	Sensor cable 3m

[Example of model number]

KML70-G-485
Model: KML70
Ⓐ Detection type: Gauge pressure method
Ⓑ Communication: RS485 communication
Ⓒ Sensor cable length: 5m

● Option (bracket/cable)

KML70 - B

Model No.

Symbol	Descriotion
Ⓐ Option	
B	Sensor bracket
P	Power supply cable (3m)
O	Output cable (3m)

Internal structure and key component materials

● Sensor body

·KML70-G-485

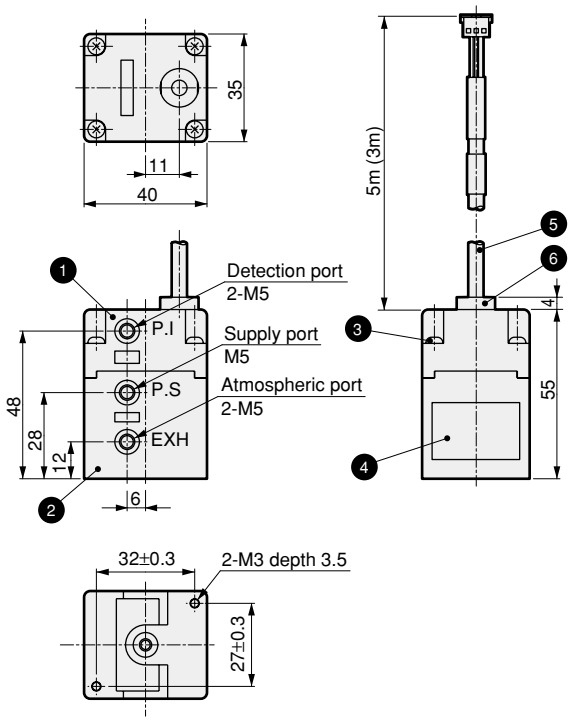

·KML70-D-485

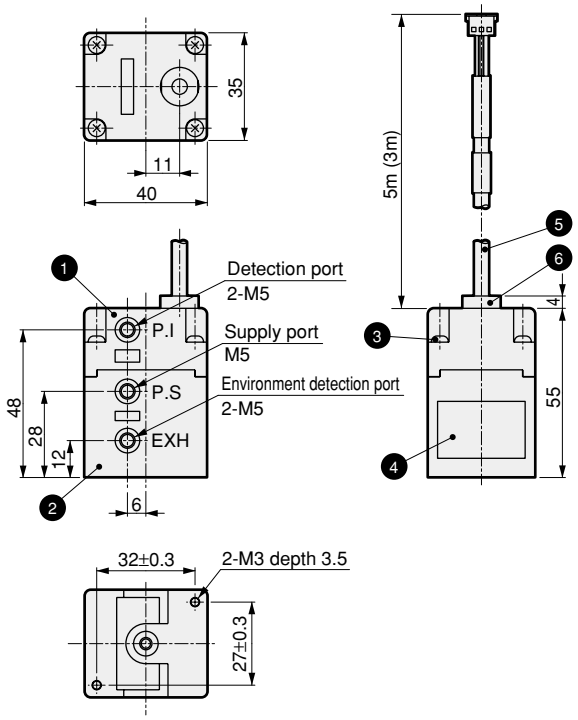

● Nipple, plug, gasket (accessories)

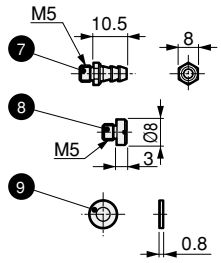

There are two P.I ports and EXH ports on the front and back of the product. Attach the enclosed plug to the ports not being used to prevent leakage.
*The EXH port is left open when using gauge pressure. Do not attach the plug.

Gauge pressure method

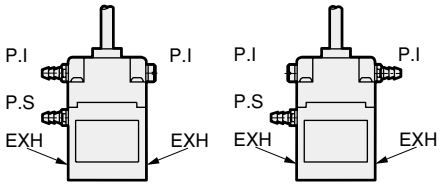

Differential pressure method

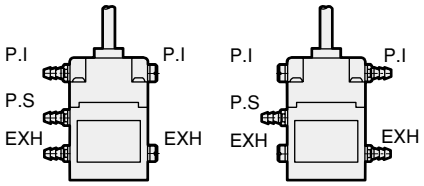

● Sensor bracket (option)

·KML70-B

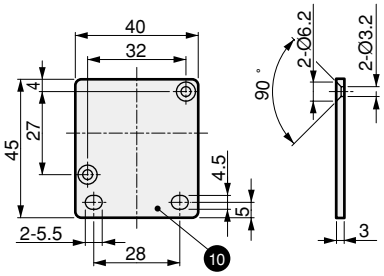

No.	Part name	Material
1	Body A	PPS
2	Body B	PPS
3	Cross headed pan screw	SUS304
4	Name plate	PET
5	Sensor cable	PVC
6	Bush	PA
7	Nipple	SUS304
8	Plug	SUS304
9	Gasket	PTFE
10	Bracket	SUS304

Internal structure and key component materials

● Display section

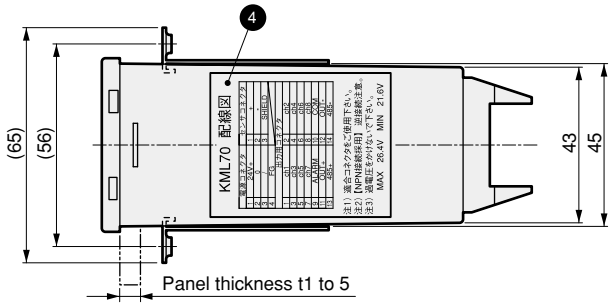

No.	Part name	Material drawing number
1	Front panel	
2	Case	PBT
3	Bracket	SUS304
4	Wiring indication plate	
5	Serial nameplate	

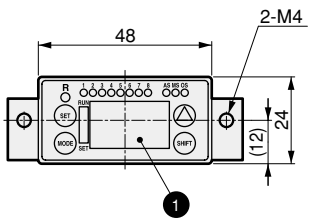

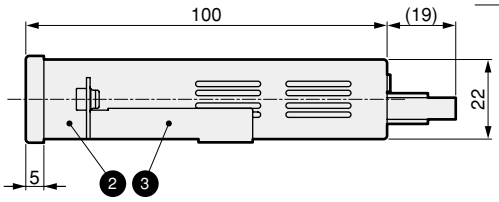

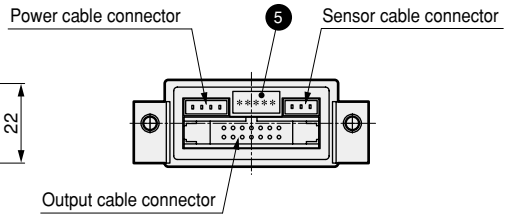

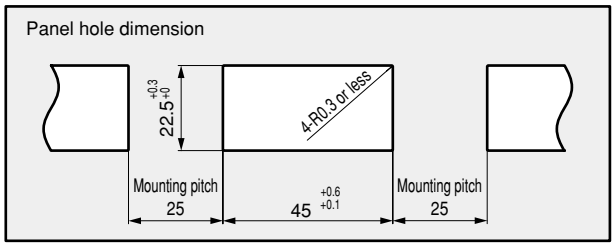

● Power supply cable (option)
·KML70-P

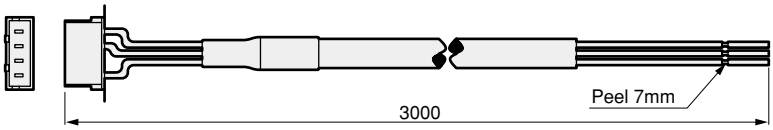

● Output cable (option)
·KML70-O

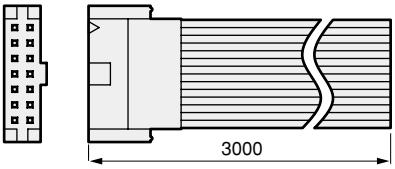

Wiring connection diagram

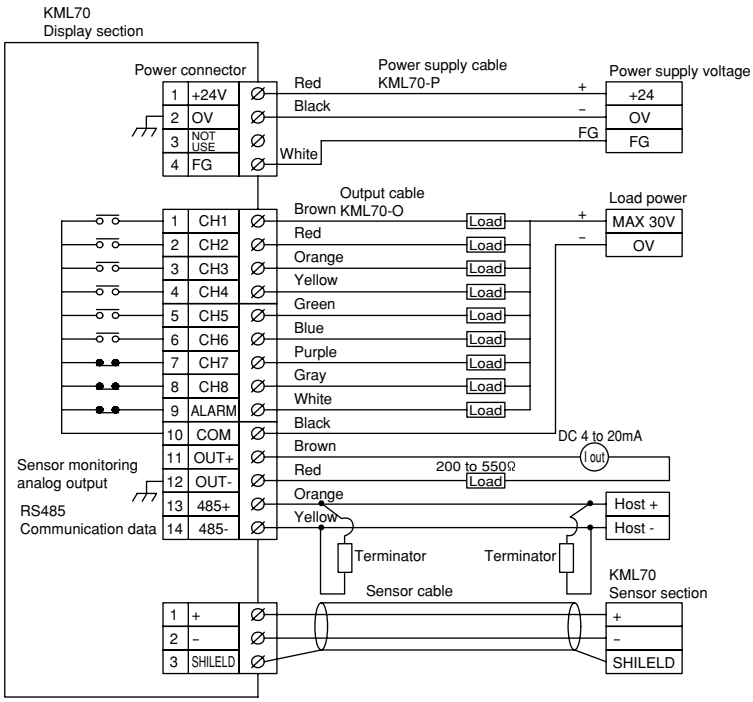

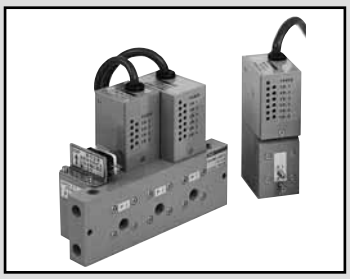

Fine level switch

KML60 Series

Detect 4-point or 6-point fluid levels with one detection tube.

Specifications

Descriptions	KML60-4	KML60-6
Working fluid	*1 Air, N_2	
Working pressure range kPa	10 to 30 (When detecting water at 10 to 500mm set water level) 15 to 30 (When detecting water at 10 to 1000mm set water level)	
Fluid temperature ˚C	5 to 50	
Ambient temperature ˚C	5 to 50	
Withstanding pressure kPa	Supply pressure: 100 Detection pressure: 20 (2000mm when detecting water level)	
Detected water level range mm	*2 10 to 1000	
Power supply voltage	12 to 24VDC ±10% Ripple (p-p) 5% or less	
Current consumption mA	40 or less (at 24VDC)	50 or less (at 24VDC)
Output type	4-point NPN open collector	6-point NPN open collector
Output rating	28VDC 80mA or less	
Insulation resistance MΩ	100 or more (500VDC for one minute)	
Withstand voltage	Commercial frequency 500VAC for one minute	
Repeatability mm	*2 ±10 (10 minutes or more after power ON)	
Hysteresis mm	*2 4 or less (set water level 10 to 200mmH_2O) 20 or less (set water level 200 to 1000mmH_2O)	
Response speed ms	600 or less (at supply pressure 20kPa, detection tube inner diameter Ø4mm, length 5m)	
Temperature characteristics mm/˚C	±1.2	
Detection tube ID size mm	4	
Detection tube length m	Within 5	

*1 Use fluids filtered with a 0.3 m or lower performance filter.
*2 The above specifications are for fluid pressure 20 kPa, power voltage 24 VDC, and ambient temperature 20˚C. The detected fluid is water.

Precautions

1. Install the switch at a position higher than the level to be detected.
2. Use compressed air filtered for dirt and oil with a submicron filter or microalescer.
3. Use an oil-prohibited low-pressure regulator.
4. Use a Ø4 mm ID size piping for detection. Do not install anything that may cause resistance, such as an aperture, in piping.
5. The manifold has six P·S ports. Mask ports that are not required.
6. This switch cannot be used in a sealed fluid tank or similar fluid tank.
7. Do not block detection piping or detection port with a valve, etc. Supply pressure applied to the sensor chip may result in damage.
8. When using as a mixed manifold with the KML50 Series, see KML50 Series precautions for use.
9. Do not stop pressure supply. Chemical liquid may flow back from the detection tube to the sensor, with adverse effects.
10. This switch cannot be used in a chemical liquid environment.

Internal structure and parts list

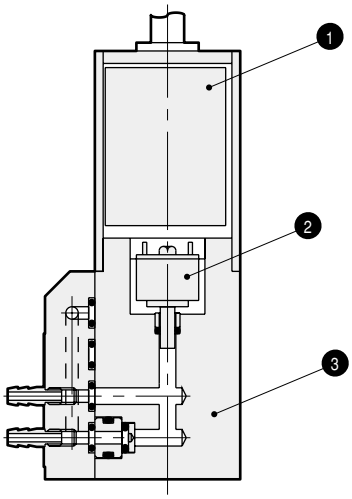

No.	Parts name	Material	Quantity
1	Circuit board	Epoxy resin with glass	1
2	Sensor	Fe/Ni alloy Nickel plating, silicone bonding	1
3	Base	PVC	1

Usage example

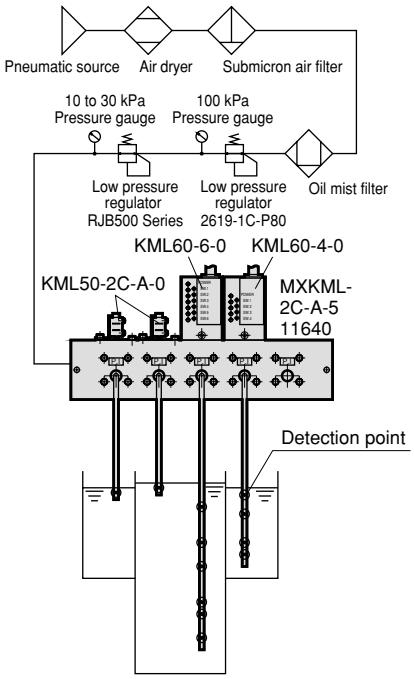

 Read the precautions on pages 7 to 12 in the introduction before use.

How to order

● Discrete

KML60 - 4 R - 0

Model No.

Ⓐ No. of output points

Ⓑ Setting trimmer operation indicator direction

Ⓒ Installation

Symbol	Description
Ⓐ No. of output points	
4	4-point setting type
6	6-point setting type
Ⓑ Setting trimmer operation indicator direction	
Blank	P.I port side
R	P.I. port back side
Ⓒ Installation *1	
Blank	For discrete manifold
0	For sub-plate installation

*1: When installing the Ⓒ 0 product on the manifold subbase, two of the supply ports on the manifold subbase become unusable. When using top ports on a manifold, other supply ports must be used.

[Example of model number]

KML60-4R-0
Model: KML60
Ⓐ No. of output points: 4 point
Ⓑ Setting trimmer operation indicator direction: P.I. port back side
Ⓒ Installation: For sub-plate installation

● Manifold

MXKML - 1C-A - 3 - 146 - R

Model No.

Ⓐ KML50 model for combination mounting

Ⓑ No. of sub-plate stations

Ⓒ Manifold switch layout

Ⓓ Setting trimmer operation indicator direction

Symbol	Description
Ⓐ KML50 model for combination mounting	
00-0	KML50 not mounted together
1C-A	KML50-1C-A-0 combination mounting
1C-B	KML50-1C-B-0 combination mounting
2C-A	KML50-2C-A-0 combination mounting
2C-B	KML50-2C-B-0 combination mounting
0A-A	KML50-0A-A-0 combination mounting
0A-B	KML50-0A-B-0 combination mounting
1B-A	KML50-1B-A-0 combination mounting
2B-A	KML50-2B-A-0 combination mounting
2B-B	KML50-2B-B-0 combination mounting
Ⓑ No. of sub-plate stations	
1	1 station
2	2 stations
3	3 stations
4	4 stations
5	5 stations
Ⓒ Manifold switch layout *1*2*3*4	
0	Masking
1	KML50 type designated with Ⓐ item
4	KML60-4-0
6	KML60-6-0
Ⓓ Setting trimmer operation indicator direction	
Blank	P.I port side
R	P.I. port back side

*1: Designate the switch layout on the manifold with 0, 1, 4, or 6 number arrays.
*2: Designate the array from the front left (P.I port side) of the manifold.
*3: Designate the same number of digits as the number of sub-plate stations designated in item Ⓑ.
*4: When using masking, always designate 0 at the masking position.

[Example of model number]

MXKML-1C-A-4-1046-R
Model: MXKML
Ⓐ KML50 model for combination mounting: KML50-1C-A-0
Ⓑ No. of sub-plate stations: 4 stations
Ⓒ Manifold switch layout: Arranged in order of KML50-1C-A-0, masking, KML60-4-0, and KML60-6-0 from front left.
Ⓓ Setting trimmer operation indicator direction: P.I. port back side

Dimensions

●KML60-4

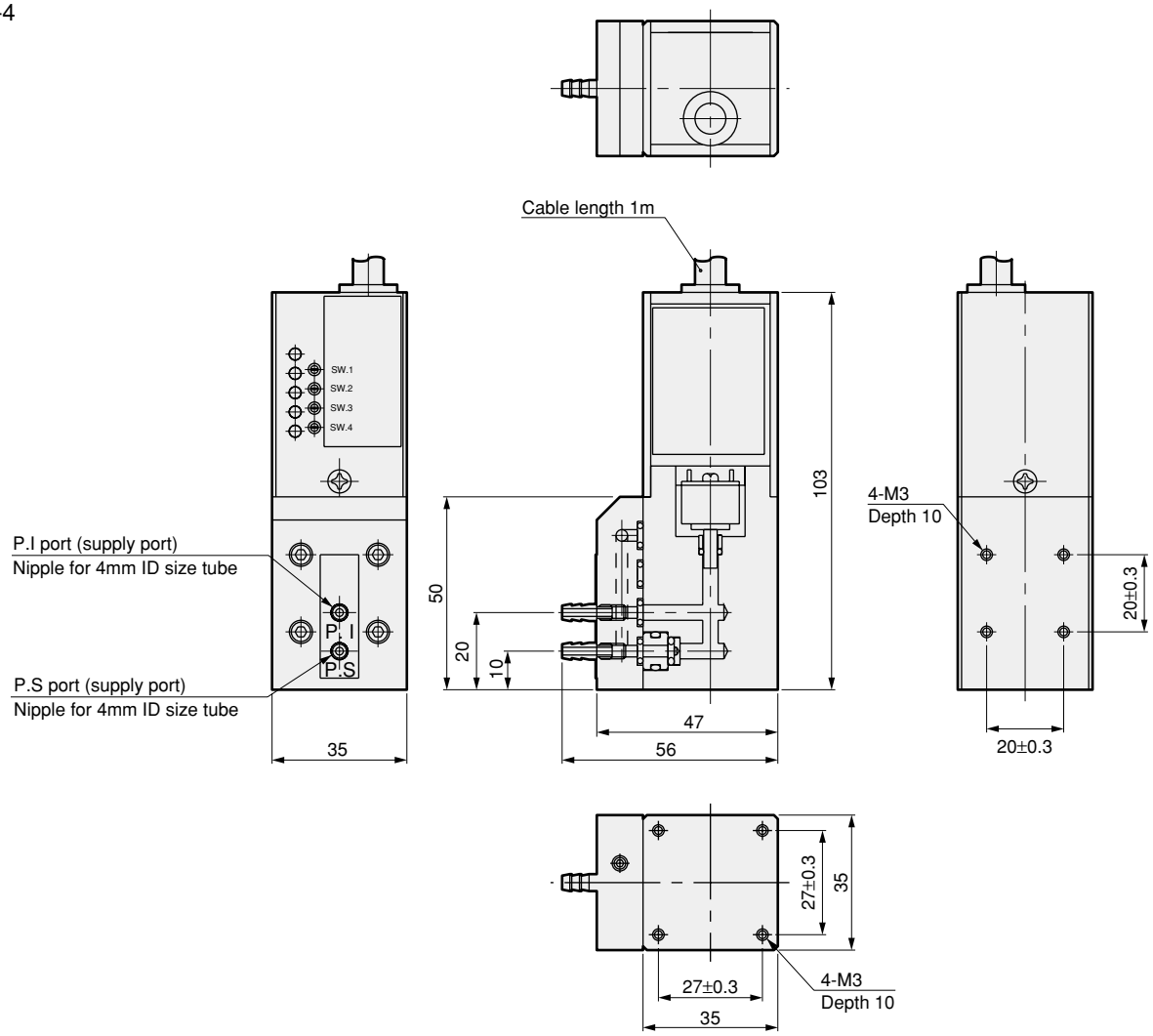

●KML60-6

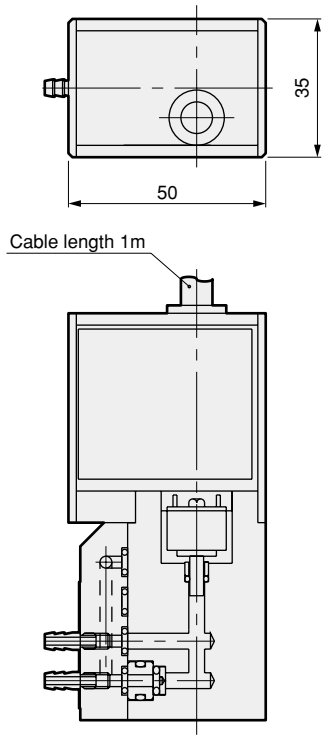

Dimensions

● MXKML-0A-A-*-* (manifold)

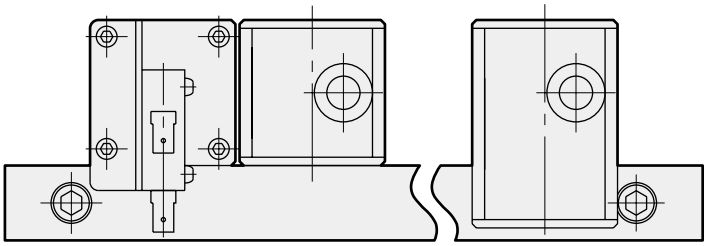

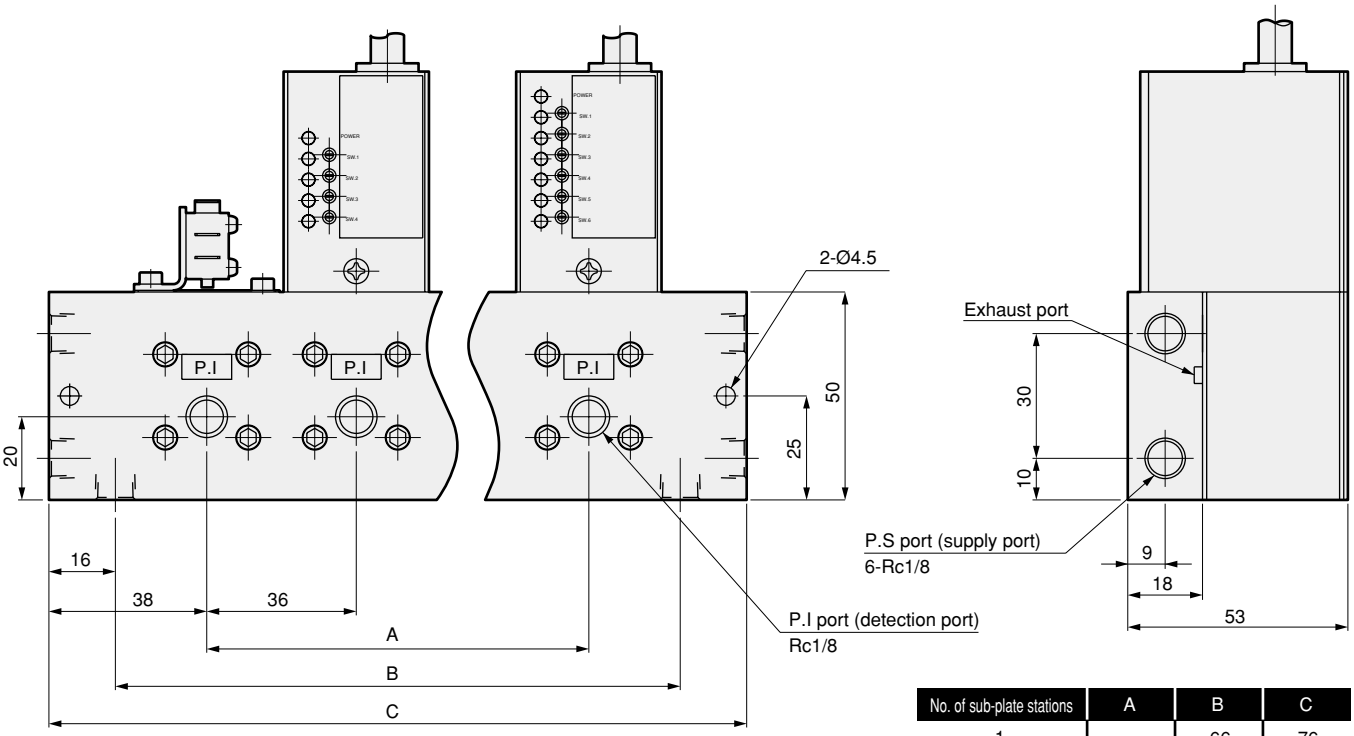

No. of sub-plate stations	A	B	C
1	-	66	76
2	36	102	112
3	72	138	148
4	108	174	184
5	144	210	220

Wiring connection diagram

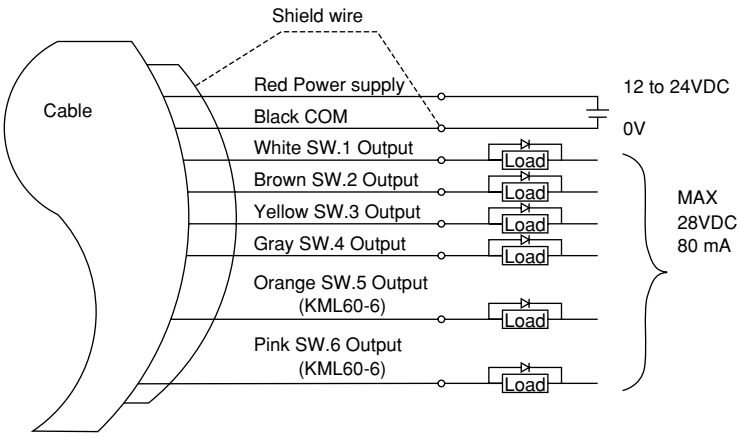

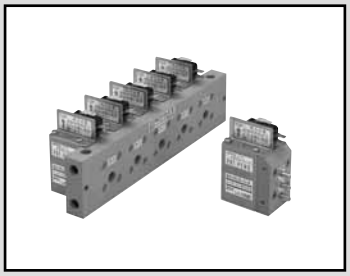

Fine level switch

KML50 Series

Fluid level detector with ±1 mm detection accuracy and outstanding installation performance

Specifications

Descriptions		KML50-0A-$^{A}_{B}$	KML50-1$^{B}_{C}$-$^{A}_{B}$	KML50-2$^{B}_{C}$-$^{A}_{B}$
Working fluid		Air, N_2		
Working pressure range kPa		15 to 35	10 to 30	
Fluid temperature ˚C		5 to 60		
Ambient temperature ˚C		15 to 40	5 to 60	
Withstanding pressure kPa		50		
Water level range mm		8 to 100	1 to 600	
Contact capacity	A type	3A 125/250V AC resistance load		
	B type	0.25A 100V DC resistance load		
Switching *1 water level level mm	Switching point	8 to 12	8 to 12	1 to 3
	Hysteresis	5 or less	2 or less	2 or less
Repeatability mm		±1		
Response speed ms		200 or less (at detection flow rate 75cm³/min(ANR), detection tube ID size Ø4mm, length 2m)		
Detection tube ID size ømm		4		
Detection tube length m		Within 2		
Air consumption rate cm³/min (ANR)		750 or less (at supply pressure 20kPa)		

Remarks: ① *1. The above specifications apply to the supply pressure 20 kPa (ambient temperature 24±2˚C). Supply highly clean air. These are values for measuring water.
② The microswitch is the C contact, and the reed switch is the A contact.

Precautions

1. Install the switch at a position higher than the level to be detected.
2. Use compressed air filtered for dirt and oil with a submicron filter or microalescer.
3. Use an oil-prohibited low-pressure regulator.
4. The switch is adjusted with water or a fluid with equivalent viscosity before shipment.
5. Use a Ø4 mm ID size piping for detection. Do not install anything that may cause resistance, such as an aperture, in piping.
6. The manifold has eight P·S ports. Mask ports that are not required.
7. This switch cannot be used in a sealed fluid tank or similar fluid tank.
8. The switch may be damaged if a load exceeding 50 kPa is applied on the PS port. Gradually increase pressure from 0.
9. Set the switch facing upward at a position higher than the fluid level.
10. The needle is adjusted before shipment, so do not readjust it.
11. Excessive pressure may result in damage if the EXH port is plugged. Leave the EXH port open.
12. If corrosive gas may be led in from the detection tube, do not stop supplied gas. This switch prevents corrosive gas from entering the detector by discharging the detected gas from the detection tube.
13. This switch cannot be used in a chemical liquid environment.

Internal structure and parts list

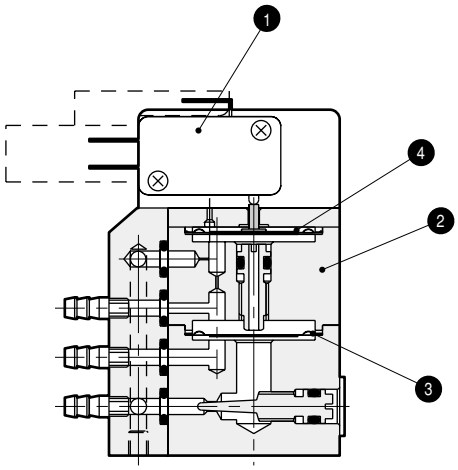

No.	Parts name	Material	Quantity
1	Microswitch	-	1
2	Body	PVC	1
3	Diaphragm	PTFE	1
4	Diaphragm	U	1

The material differs with the model. Contact CKD for details.

 Read the precautions on pages 7 to 12 in the introduction before use.

How to order

● Discrete

KML50 - 1 B - B - ( )

Model No.

Ⓐ Detection class

Ⓑ Material combination

Ⓒ Switch type

Ⓓ Option

Symbol	Description	
Ⓐ Detection class	Switching point	Hysteresis
0 (Note 1)	8 to 12	5
1 (Note 1)	8 to 12	2
2 (Note 1)	1 to 3	2

Ⓑ Material combination	Body	Diaphragm
A	PVC	PTFE
B	A6063	U
C	PVC	U

Ⓒ Switch type	
A	Microswitch
B	Reed switch

Ⓓ Option	
Blank	Discrete
0	Discrete for manifold

● Manifold

MKML - 1 B - B - 4 - 2

Model No.

Ⓐ Detection class

Ⓑ Material combination

Ⓒ Switch type

Ⓓ No. of sub-plate stations

Ⓔ No. of masks

Symbol	Description	
Ⓐ Detection class	Switching point	Hysteresis
0 (Note 1)	8 to 12	5
1 (Note 1)	8 to 12	2
2 (Note 1)	1 to 3	2

Ⓑ Material combination	Body	Diaphragm
A	PVC	PTFE
B	A6063	U
C	PVC	U

Ⓒ Switch type	
A	Microswitch
B	Reed switch

Ⓓ No. of sub-plate stations	
1	1 station
2	2 stations
3	3 stations
4	4 stations
5	5 stations

Ⓔ No. of masks	
0	No masking
1	1 attached
2	2 attached
3	3 attached
4	4 attached

⚠ Note on model No. selection

Note 1: When Ⓐ is 0, only A is used for Ⓑ. If Ⓐ is 1 or 2, only B or C is used for Ⓑ.

Dimensions

● KML50-0A-A

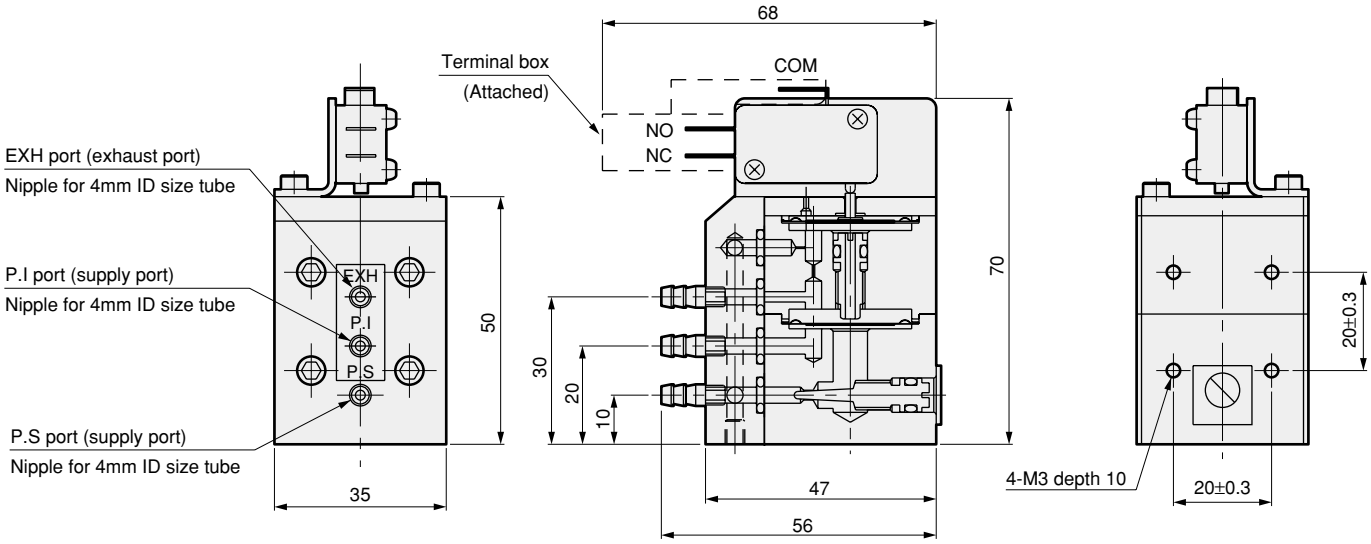

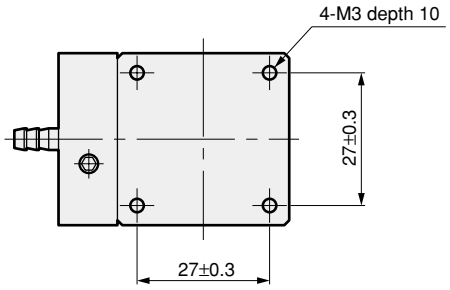

Dimensions

● MKML-0A-A-*-* (manifold)

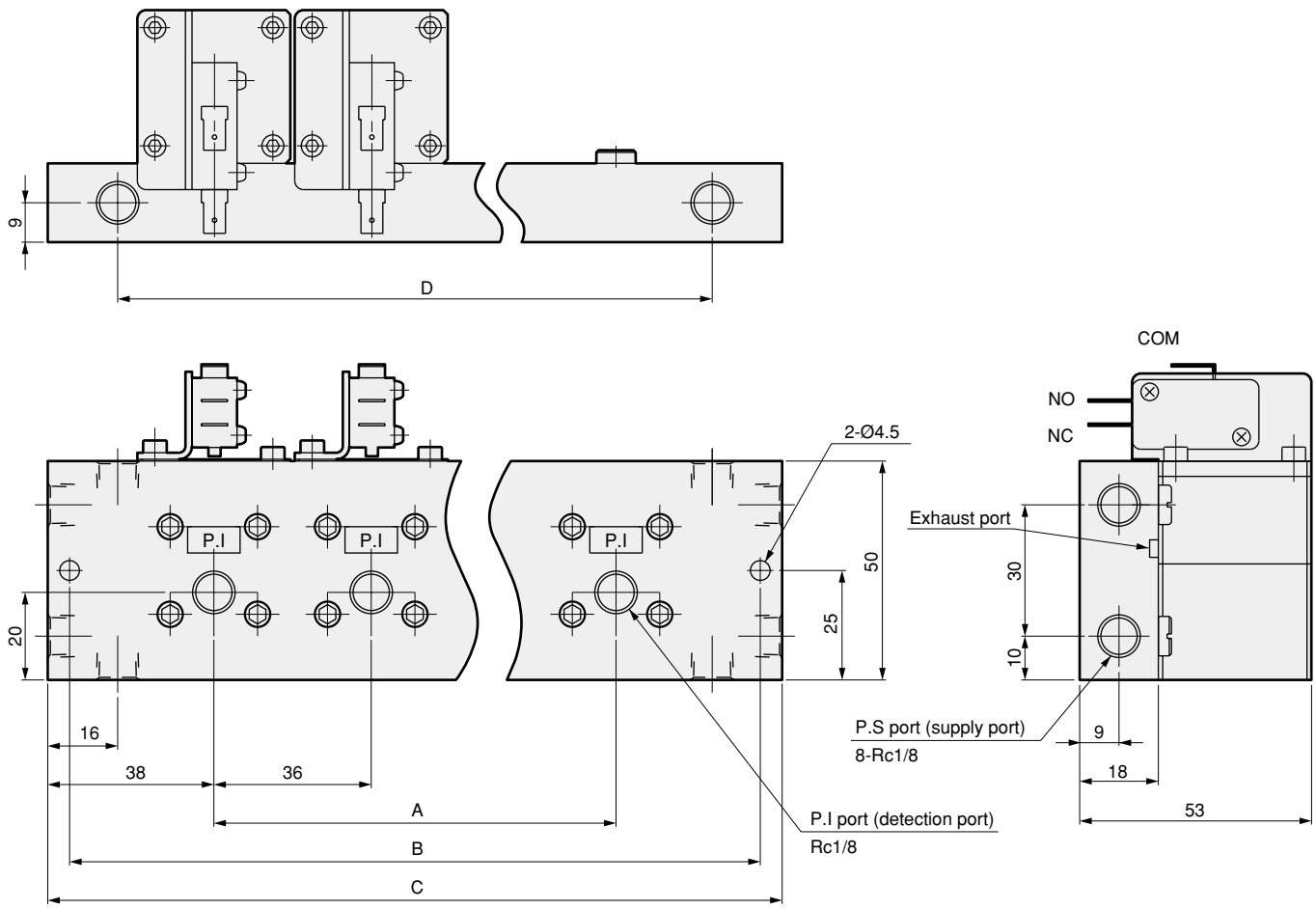

No. of sub-plate stations	A	B	C	D
1	-	66	76	44
2	36	102	112	80
3	72	138	148	116
4	108	174	184	152
5	144	210	220	188

Other high purity chemical liquid components

Microflow adjustment valve	144
Pilot regulator	146
Dump valve (2-port valve)	148
Dump valve (3-port valve)	150

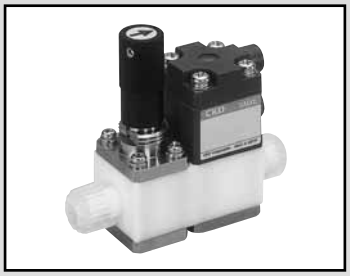

Microflow adjustment valve Series

Realizing stable microflow adjustment by separating flow control and valve open/close functions

Specifications

Descriptions	LYX-0961-*, LYX-0965-*
Working fluid	Chemical liquids, pure water
Fluid temperature ˚C	5 to 60
Withstanding pressure MPa	0.6
Working pressure range MPa	0 to 0.3
Ambient temperature ˚C	0 to 60
Installation attitude	Free

Note 1: This valve cannot be used with acidic fluids.
Note 2: See AMDZ on page 2 for air-operated valve specifications.

Model No.

LYX - 0961 - 6BUS - 1

Ⓐ Type

Ⓐ Type	
0961	Air-operated valve integrated type
0965	Only microflow adjustment valve (no valve closing function)

Ⓑ Connection

Ⓑ Connection		
6	Rc1/8	
3US	Super type Pillar fitting integrated type	Ø3 X Ø2 tube connection
6BUS		1/8" X 0.086" tube connection
3UF	F-LOCK 20 series fitting integrated type	Ø3 X Ø2 tube connection
3UR	F-LOCK 60 series fitting integrated type	Ø3 X Ø2 tube connection
6BUR		1/8" X 1/16" tube connection

Ⓒ Actuation
(Select only for LYX-0961)

Ⓒ Actuation	
1	NC (normally closed)
2	NO (normally open)
3	Double acting

Flow characteristics/pressure characteristics

Comparison of flow characteristics

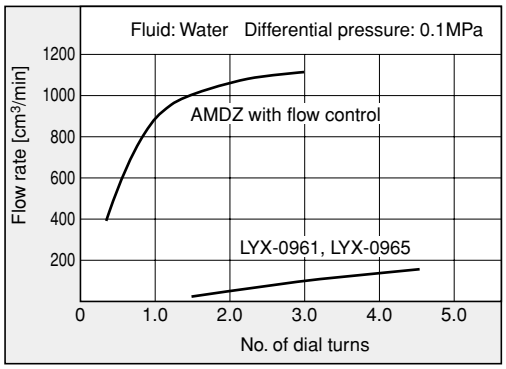

 ⚠ Read the precautions on pages 7 to 12 in the introduction before use.

Dimensions

● LYX-0961-6BUS-1

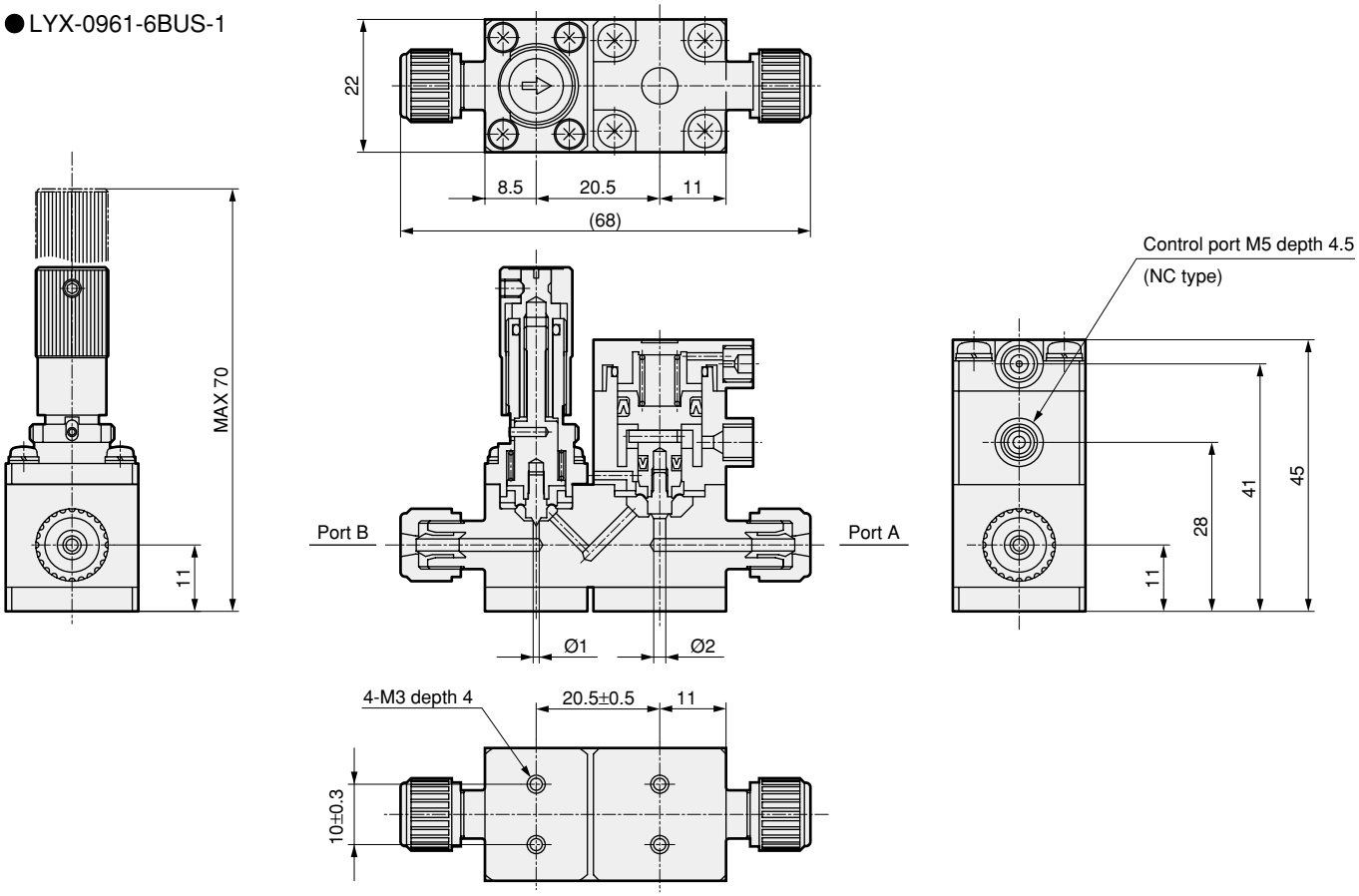

● LYX-0965-6

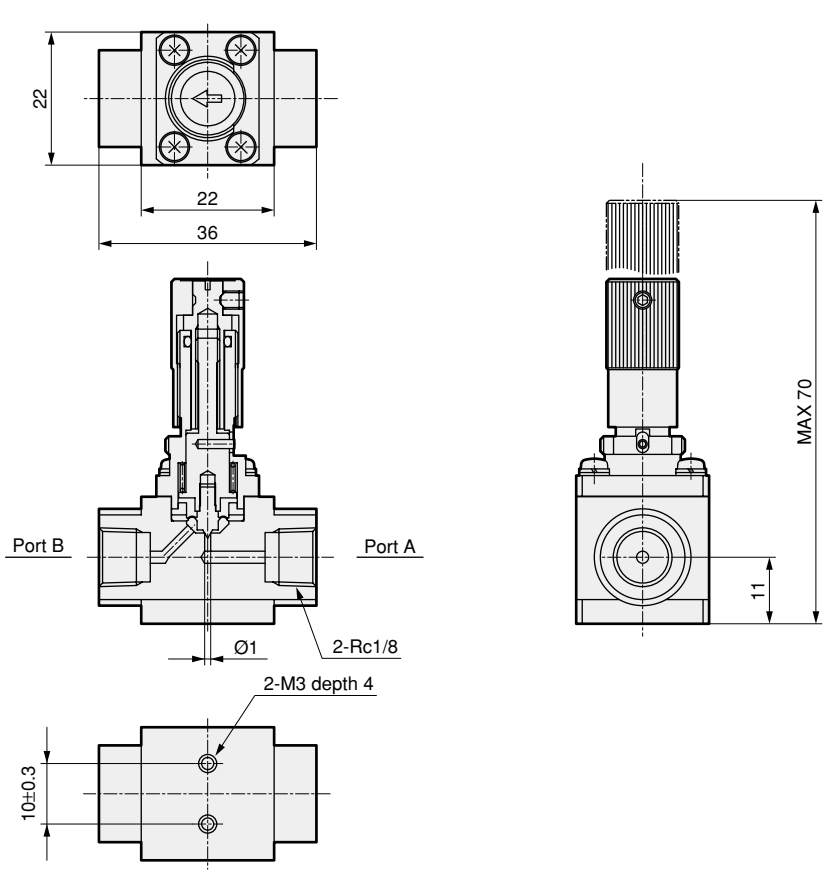

Pilot regulator Series

Enabling accurate pressure control with air drive

Subject to Export Trade Control Ordinances

*Target: LYX-0960 only

Specifications

Descriptions	LYX-0958	LYX-0959	LYX-0960
Working fluid	Pure water, chemical liquids		
Maximum working pressure MPa	0.3		
Maximum working pressure MPa	0.1		
Set pressure range MPa	0.02 to 0.1		
Fluid temperature ˚C	5 to 40		
Set flow rate ℓ/min	0.1 to 2	2 to 10	10 to 30
Connection	Rc1/4, 1/4" tube connection	Rc1/2, 1/2" tube connection	Rc3/4, 3/4" tube connection

Note 1: Consult with CKD when using acidic fluids.
Note 2: The secondary side of the pilot regulator must be released to air. (There is no valve closing function.)

How to order

● Small flow type

LYX - 0958 - 8BUS

Ⓐ Connection

Ⓐ Connection		
8	Rc1/4	
6US	Super type Pillar fitting integrated type	Ø6 X Ø4 tube connection
8BUS		1/4" X 5/32" tube connection
6UJ	Super 300 type Pillar fitting J series integrated type	Ø6 X Ø4 tube connection
8BUJ		1/4" X 5/32" tube connection
6UP	Super 300 type Pillar fitting P series integrated type	Ø6 X Ø4 tube connection
8BUP		1/4" X 5/32" tube connection
6UF	F-LOCK 20 series fitting integrated type	Ø6 X Ø4 tube connection
8BUF		Ø6.35 X Ø4.3 tube connection
6UR	F-LOCK 60 series fitting integrated type	Ø6 X Ø4 tube connection
8BUR		1/4" X 5/32" tube connection
6UK	Final lock fitting integrated type	Ø6 X Ø4 tube connection
8BUK		1/4" X 5/32" tube connection
8BUW	FLARTEC fitting integrated type	1/4" X 5/32" tube connection

● Medium flow type

LYX - 0959 - 12UJ

Ⓐ Connection

Ⓐ Connection		
15	Rc1/2	
12US	Super type Pillar fitting integrated type	Ø12 X Ø10 tube connection
15BUS		1/2" X 3/8" tube connection
12UJ	Super 300 type Pillar fitting J series integrated type	Ø12 X Ø10 tube connection
15BUJ		1/2" X 3/8" tube connection
12UP	Super 300 type Pillar fitting P series integrated type	Ø12 X Ø10 tube connection
15BUP		1/2" X 3/8" tube connection
12UA	F-LOCK 20A series fitting integrated type	Ø12 X Ø10 tube connection
15BUA		1/2" X 3/8" tube connection
12UR	F-LOCK 60 series fitting integrated type	Ø12 X Ø10 tube connection
15BUR		1/2" X 3/8" tube connection
12UK	Final lock fitting integrated type	Ø12 X Ø10 tube connection
15BUK		1/2" X 3/8" tube connection
15BUW	FLARTEC fitting integrated type	1/2" X 3/8" tube connection

● Large flow type

LYX - 0960 - 20BUR

Ⓐ Connection

Ⓐ Connection		
20	Rc3/4	
20BUS	Super type Pillar fitting integrated type	3/4 " X 5/8 " tube connection
20BUJ	Super 300 type Pillar fitting J series integrated type	
20BUP	Super 300 type Pillar fitting P series integrated type	
20BUA	F-LOCK 20A series fitting integrated type	
20BUR	F-LOCK 60 series fitting integrated type	
20BUK	Final lock fitting integrated type	
20BUW	FLARTEC fitting integrated type	

 ⚠ Read the precautions on pages 7 to 12 in the introduction before use.

Flow characteristics (water)

● LYX-0958

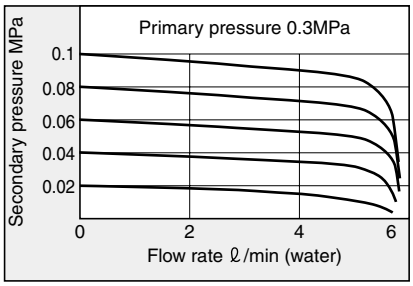

● LYX-0959

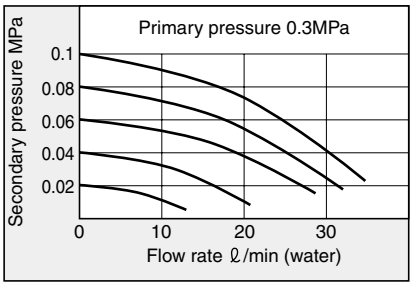

● LYX-0960

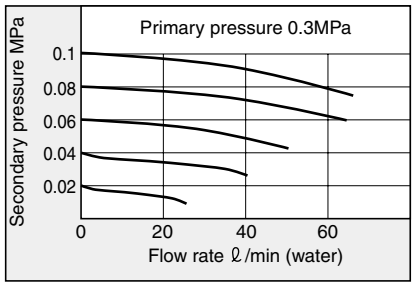

Dimensions

- ●LYX-0958- *1
- ●LYX-0959- *1
- ●LYX-0960- *1

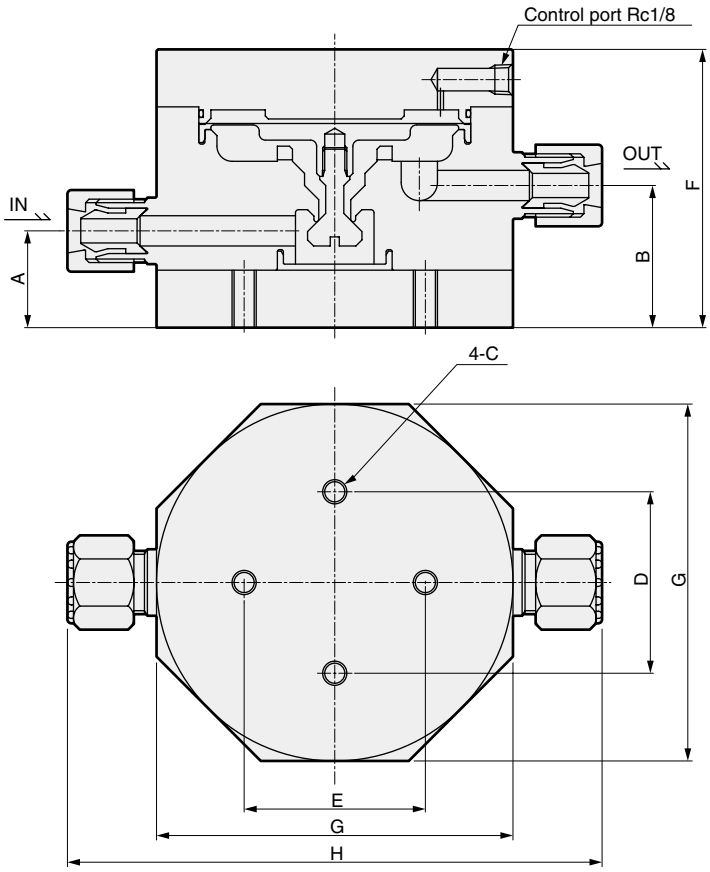

Dimension / Model No.	A	B	C	D	E	F	G
LYX-0958	28	40	M6 depth 16	50±0.4	50±0.4	76	84
LYX-0959	32	47	M8 depth 19	60±0.4	60±0.4	92	118
LYX-0960	35	55	M8 depth 19	80±0.4	80±0.4	110	146

LYX-0958

*1 (Connection model No.)	H
8	84
6US	120
8BUS	120
6UJ	118
8BUJ	118
6UP	122
8BUP	122
6UF	118
8BUF	118
6UR	144
8BUR	146
6UK	125
8BUK	125
8BUW	140

LYX-0959

*1 (Connection model No.)	H
15	118
12US	177
15BUS	177
12UJ	172
15BUJ	172
12UP	176
15BUP	176
12UA	168
15BUA	168
12UR	192
15BUR	196
12UK	184
15BUK	184
15BUW	185

LYX-0960

*1 (Connection model No.)	H
20	146
20BUS	224
20BUJ	214
20BUP	218
20BUA	208
20BUR	234
20BUK	219
20BUW	222

Air-operated valve for chemical liquids

Discharge valve (2-port valve) Series

● Orifice: Ø25/Ø32/Ø40/Ø50

Specifications

Descriptions		LYX-0877	LYX-0878	LYX-0879	LYX-0880
Working fluid		Chemical liquids, pure water (Note 1)			
Fluid temperature ℃		5 to 90			
Withstanding pressure MPa		0.1			
Working pressure range MPa		0.02			
Valve seat leakage cm³/min		0 (at, water pressure)			
Ambient temperature ℃		0 to 40			
Frequency		6 times/min or less			
Installation attitude		Free			
Connection (PVC union fitting integrated type)		Nominal 25	Nominal 30	Nominal 40	Nominal 50
Orifice		Ø25	Ø32	Ø40	Ø50
Operation section	Operation pressure range MPa	0.4 to 0.5			
	Operation pressure connection port	Rc1/8			

Note 1: Check compatibility of product configuration materials, working fluid, and ambient atmosphere before use.

How to order

LYX - 0877 - 25AU - 2P A

Ⓐ Connection　　Ⓑ O ring material

Symbol	Descriptions \ Orifice	Ⓐ Connection			
		0877-25AU	0878-32AU	0879-40AU	0880-50AU
		PVC union fitting			
		Nominal 25	Nominal 30	Nominal 40	Nominal 50
		Ø25	Ø32	Ø40	Ø50
Ⓑ O ring material					
A	EPDM	●	●	●	●
I	FKM	●	●	●	●

 ⚠ Read the precautions on pages 7 to 12 in the introduction before use.

Dimensions

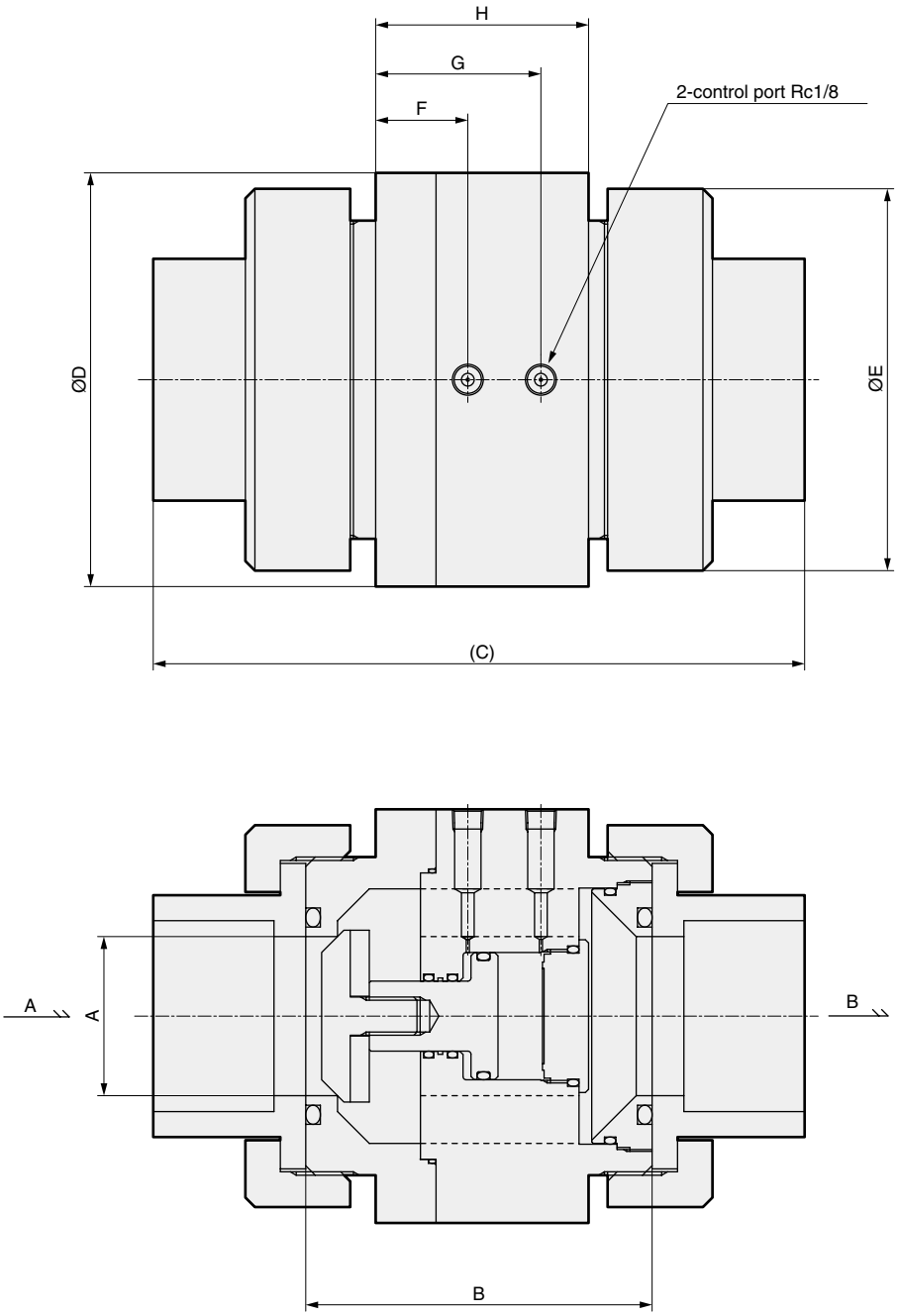

Dimension / Model No.	A	B	C	D	E	F	G	H
LYX-0877-25AU	25	75	147	76	70	18	32	45
LYX-0878-32AU	32	101	189	100	96	29	49	63
LYX-0879-40AU	40	101	183	100	96	29	49	63
LYX-0880-50AU	50	109	205	130	120	29	52	67

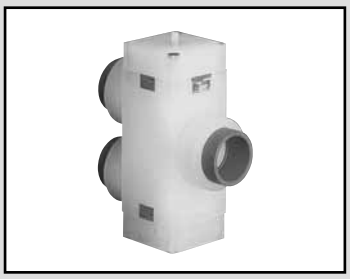

Air-operated valve for chemical liquids

Discharge valve (3-port valve) Series

●Orifice: Ø32/Ø40/Ø50

Specifications

Descriptions		LYX-0882	LYX-0883	LYX-0884
Working fluid		Chemical liquids, pure water (Note 1)		
Fluid temperature ℃		5 to 90		
Withstanding pressure MPa		0.1		
Working pressure range MPa		0.02		
Valve seat leakage cm^3/min		0 (at, water pressure)		
Ambient temperature ℃		0 to 40		
Frequency		6 times/min or less		
Installation attitude		Free		
Connection (PVC union fitting integrated type)		Nominal 30	Nominal 40	Nominal 50
Orifice		Ø32	Ø40	Ø50
Operation section	Operation pressure range MPa	0.4 to 0.5		
	Operation pressure connection port	Rc1/8		

Note 1: Check the compatibility of the product's configuration materials, working fluid, and ambient atmosphere before use.

How to order

LYX - 0882-32AU - 3P A

Ⓐ Connection Ⓑ O ring material

Symbol	Descriptions \ Orifice	Ⓐ Connection		
		0882-32AU	0883-40AU	0884-50AU
		PVC union fitting		
		Nominal 30	Nominal 40	Nominal 50
		Ø32	Ø40	Ø50
Ⓑ O ring material				
A	EPDM	●	●	●
I	FKM	●	●	●

 ⚠Read the precautions on pages 7 to 12 in the introduction before use.

Dimensions

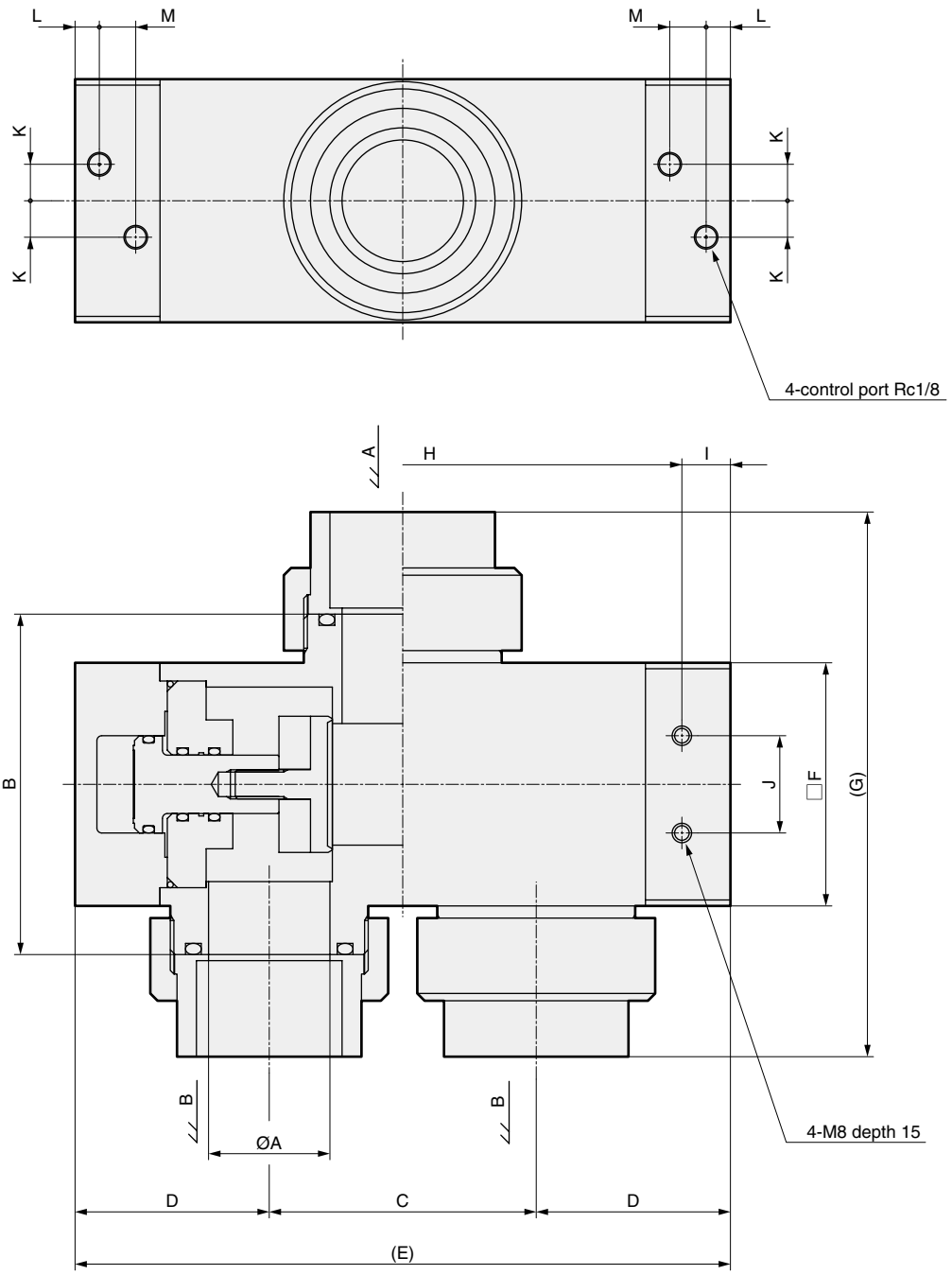

Dimension / Model No.	A	B	C	D	E	F	G	H	I	J	K	L	M
LYX-0882-32AU	32	130	90	70	230	90	190	200	15	40	15	10	10
LYX-0883-40AU	40	130	90	70	230	90	198	200	15	40	15	10	10
LYX-0884-50AU	50	140	110	80	270	100	224	230	20	40	15	10	10

Operation solenoid valve

Overview

Solenoid valves for chemical liquid air-operated valves are available.

These compact, space-saving, high-performance solenoid valves have safety functions and are eco-friendly.

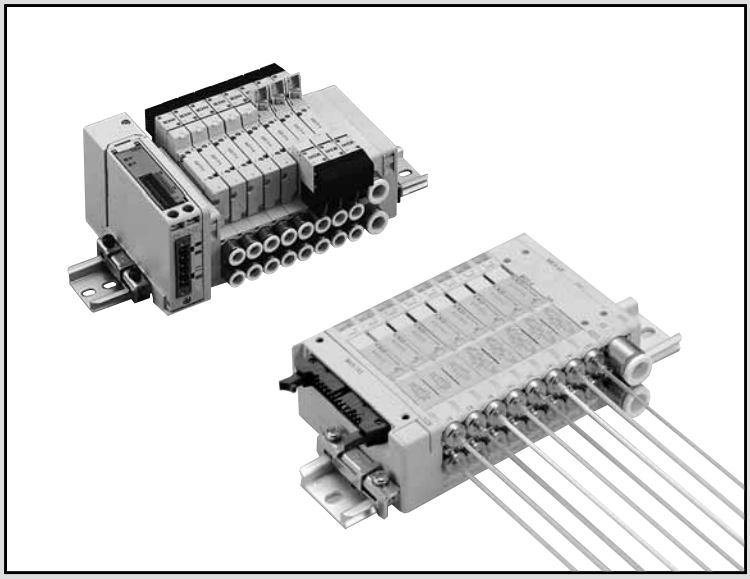

MN3E0/MN4E0	miniature solenoid valve	154
MN4GA/4GB	pilot-operated pneumatic 3/5-port valve block manifold	154
4GA/4GB	pilot-operated pneumatic 3/5-port valve	155

MN3E0/MN4E0 Series

(3/4 port valve, two built-in 3-port valves integrated type)

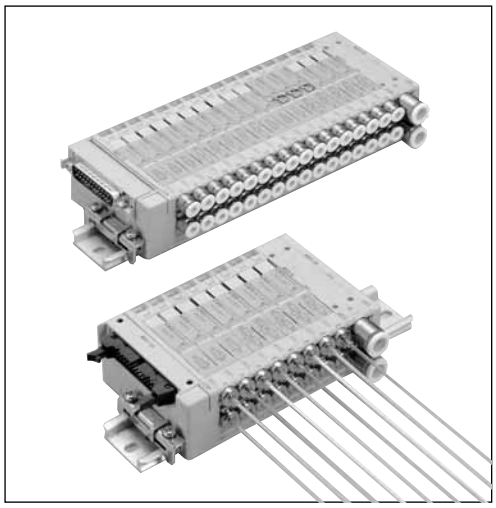

(Catalog No. CC-691)

Extra compact (height 39.5mm), high-performance block manifold

- **Compact and space saving**
  A 40mm or less valve height is realized with a 10mm coil width (CKD conventional part: 46mm)
  This valve improves the equipment's foot print, and can be installed anywhere.
- **Environment protection**
  Environment-friendly non-halogen lead wires are used for the internal wire. (T30 type D sub-connector)
- **High performance**
  · Well balanced responsiveness of 12ms between A port and B port (CKD data value using type with two built-in 3-port valves)
  · No more bothersome wiring work
  Adoption of connectors allows wiring work to be completed during assembly.

Specifications

Descriptions	MN3E0	MN4E0
Working fluid	Compressed air	
Actuation	Pilot operated	
Valve structure	Soft spool	
Working pressure MPa	0.2 to 0.7	
Ef. sec. area mm²	2.5 to 2.7	2.4 to 2.7
Electrical specifications		
Rated voltage V	12, 24 DC	
Power consumption W	0.6	

MN4GA/4GB Series

(3/5 port valve block manifold)

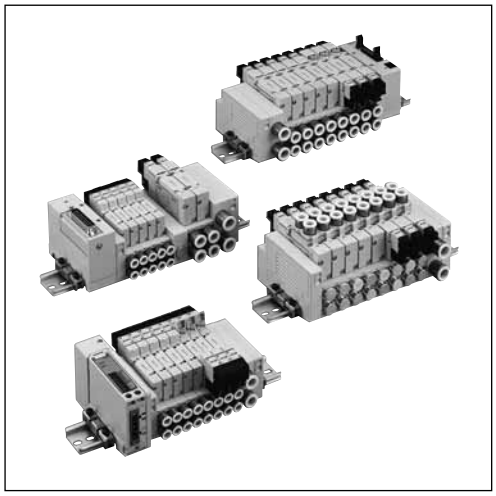

(Catalog No. CB-23S)

User and eco-friendly next-generation block manifold

- **Environment resistance**
  Paintless: Dust is not generated by peeling paint.
  Indication of material names: Material names are displayed on key components to facilitate recycling, etc.
- **Safety**
  Miss-operation prevention mechanism is incorporated in connection key
- **Ease-of-use**
  Reduced wiring: Serial transmission(compact slave station OPP4)
  Piping connection: Direct piping type, base piping type
  TAG nameplates available
- **Flexibility**
  Mixed blocks compatible with MN4G1 and 2 mounting
- **Reliability**
  Responsiveness 12ms±2ms (CKD data value for 4G1 series)
  Life cycles 60 million or more (with clean air at 0.5MPa pressure)

Specifications

Descriptions		MN3G	MN4G
Working fluid		Compressed air	
Actuation		Pilot operated	
Valve structure		Soft spool	
Working pressure MPa		0.2 to 0.7	
Ef. sec. area mm²		3.2 to 13	
Electrical specifications			
Rated voltage V	DC	12, 24	
	AC	100	
Power consumption W	12, 24 DC	0.55 (0.6)	
Apparent power VA	100V AC	1.0 (1.2)	

Values in parentheses apply when a lamp is installed.

4GA/4GB Series

(3/5 port valve)

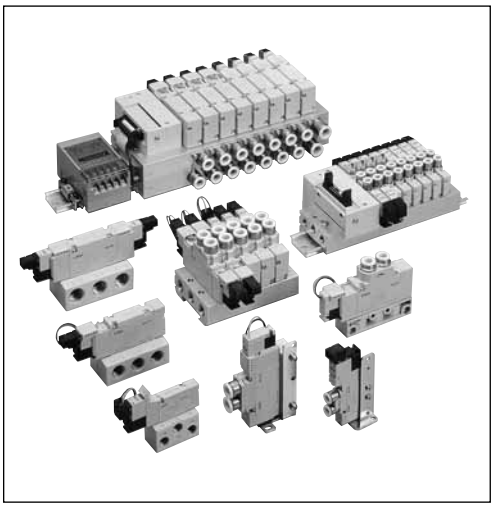

(Catalog No. CB-23S)

General-purpose valves for diverse needs

● **Safety**

Protective cover protects miss-operation of the manual override caused by external force, etc.

Cylinder miss-operation caused by back pressure is prevented when using a single-acting cylinder.

● **Reliability**

· Life cycles 60 million or more (with clean air at 0.5MPa pressure)
60 million cycles exceeded in CKD's specified strict durability test.

· Responsiveness 12ms±2ms (CKD data value for 4G1 series)
New sliding mechanism accurately improves reliability of life and responsiveness, etc.

● **Ease-of-use**

· Common wiring connectors for top or side mounting
Top and side wiring are possible just by inserting the wire. PAT.

Specifications

Descriptions		3G	4G
Working fluid		Compressed air	
Actuation		Pilot operated	
Valve structure		Soft spool	
Working pressure MPa		0.2 to 0.7	
Ef. sec. area mm²		3.2 to 19	4 to 19
Electrical specifications			
Rated voltage V	DC	12, 24	
	AC	100	
Power consumption W	12, 24 DC	0.55 (0.6)	
Apparent power VA	100V AC	1.0 (1.2)	

Values in parentheses apply when a lamp is installed.

Guide to CKD Electronic Catalog
(CAD DATA)

Using and ordering the electronic catalog

The electronic catalog, which aims to make CAD designing more efficient, is provided on a CD-ROM as a pneumatic and control component related CAD database which focuses on the designers needs.
Please contact your CKD Sales person or your nearest sales office to order this CD.

Indicate the following information when placing your order:
(1) CAD software name and version
(2) OS name

There are three types of CD-ROMS according to the recorded CAD software and OS type. Always indicate the name of the CAD software and the OS you are using.

Compatible CAD types

1	MICRO CADAM Ver 1.9
2	DMNDOS (MICRO CADAM DOS ver.)
3	DXF

Note 1: The CAD software names are registered trademarks of the respective companies.
Note 2: Use DXF data when using CAD software other than those listed above.

● DXF data can be downloaded from the CKD internet website.
http://www.ckd.co.jp/

Searching the electronic catalog file name

1. Searching from the catalog
   If there is a CAD mark (CAD) in the catalog, the CAD data is registered. Search for the registered file using the applicable product model, listed on the following page, as a key. Input "CAD data file name" from the CAD software to call out the drawing.

2. Searching from the CD-ROM
   Open kensaku.exe, List.txt (for DXF) or LIST_MC.txt (for MICRO CADAM) on the CD-ROM, and search for the registered file name using the applicable product Model No. as a key. The drawings can then be called out by inputting the "CAD data file name" from the CAD software.

Air-operated valve for chemical liquids

● AMDZ/AMD0 PFA body

Product Model No.	DXF	
	Folder name	File name
AMDZ*-6-2	AMDZ	amdz_ _6_2.dxf
AMDZ*-6-2-1		amdz_ _6_2_1.dxf
AMDZ*-3US-2		amdz_ _3us_2.dxf
AMDZ*-3US-2-1		amdz_ _3us_2_1.dxf
AMDZ*-6BUS-2		amdz_ _6bus_2.dxf
AMDZ*-6BUS-2-1		amdz_ _6bus_2_1.dxf
AMDZ*-3UF-2		amdz_ _3uf_2.dxf
AMDZ*-3UF-2-1		amdz_ _3uf_2_1.dxf
AMDZ*-3UR-2		amdz_ _3ur_2.dxf
AMDZ*-3UR-2-1		amdz_ _3ur_2_1.dxf
AMDZ*-6BUR-2		amdz_ _6bur_2.dxf
AMDZ*-6BUR-2-1		amdz_ _6bur_2_1.dxf
AMD0*-6-4	AMD0	amd0_ _6_4.dxf
AMD0*-6-4-1		amd0_ _6_4_1.dxf
AMD0*-6US-4		amd0_ _6us_4.dxf
AMD0*-6US-4-1		amd0_ _6us_4_1.dxf
AMD0*-8BUS-4		amd0_ _8bus_4.dxf
AMD0*-8BUS-4-1		amd0_ _8bus_4_1.dxf
AMD0*-6UJ-4		amd0_ _6uj_4.dxf
AMD0*-6UJ-4-1		amd0_ _6uj_4_1.dxf
AMD0*-8BUJ-4		amd0_ _8buj_4.dxf
AMD0*-8BUJ-4-1		amd0_ _8buj_4_1.dxf
AMD0*-6UP-4		amd0_ _6up_4.dxf
AMD0*-6UP-4-1		amd0_ _6up_4_1.dxf
AMD0*-8BUP-4		amd0_ _8bup_4.dxf
AMD0*-8BUP-4-1		amd0_ _8bup_4_1.dxf
AMD0*-6UF-4		amd0_ _6uf_4.dxf
AMD0*-6UF-4-1		amd0_ _6uf_4_1.dxf
AMD0*-8BUF-4		amd0_ _8buf_4.dxf
AMD0*-8BUF-4-1		amd0_ _8buf_4_1.dxf
AMD0*-6UR-4		amd0_ _6ur_4.dxf
AMD0*-6UR-4-1		amd0_ _6ur_4_1.dxf
AMD0*-8BUR-4		amd0_ _8bur_4.dxf
AMD0*-8BUR-4-1		amd0_ _8bur_4_1.dxf
AMD0*-6UK-4		amd0_ _6uk_4.dxf
AMD0*-6UK-4-1		amd0_ _6uk_4_1.dxf
AMD0*-8BUK-4		amd0_ _8buk_4.dxf
AMD0*-8BUK-4-1		amd0_ _8buk_4_1.dxf
AMD0*-8BUW-4		amd0_ _8buw_4.dxf
AMD0*-8BUW-4-1		amd0_ _8buw_4_1.dxf

File list

● AMD3*2 PFA body

Product Model No.	DXF	
	Folder name	File name
AMD3*2-10US-0	AMD3_2	amd3_2_10us_0.dxf
AMD3*2-10US-1		amd3_2_10us_1.dxf
AMD3*2-10US-2		amd3_2_10us_2.dxf
AMD3*2-10US-3		amd3_2_10us_3.dxf
AMD3*2-10BUS-0		amd3_2_10bus_0.dxf
AMD3*2-10BUS-1		amd3_2_10bus_1.dxf
AMD3*2-10BUS-2		amd3_2_10bus_2.dxf
AMD3*2-10BUS-3		amd3_2_10bus_3.dxf
AMD3*2-10UJ-0		amd3_2_10uj_0.dxf
AMD3*2-10UJ-1		amd3_2_10uj_1.dxf
AMD3*2-10UJ-2		amd3_2_10uj_2.dxf
AMD3*2-10UJ-3		amd3_2_10uj_3.dxf
AMD3*2-10BUJ-0		amd3_2_10buj_0.dxf
AMD3*2-10BUJ-1		amd3_2_10buj_1.dxf
AMD3*2-10BUJ-2		amd3_2_10buj_2.dxf
AMD3*2-10BUJ-3		amd3_2_10buj_3.dxf
AMD3*2-10UP-0		amd3_2_10up_0.dxf
AMD3*2-10UP-1		amd3_2_10up_1.dxf
AMD3*2-10UP-2		amd3_2_10up_2.dxf
AMD3*2-10UP-3		amd3_2_10up_3.dxf
AMD3*2-10BUP-0		amd3_2_10bup_0.dxf
AMD3*2-10BUP-1		amd3_2_10bup_1.dxf
AMD3*2-10BUP-2		amd3_2_10bup_2.dxf
AMD3*2-10BUP-3		amd3_2_10bup_3.dxf
AMD3*2-10UA-0		amd3_2_10ua_0.dxf
AMD3*2-10UA-1		amd3_2_10ua_1.dxf
AMD3*2-10UA-2		amd3_2_10ua_2.dxf
AMD3*2-10UA-3		amd3_2_10ua_3.dxf
AMD3*2-10BUA-0		amd3_2_10bua_0.dxf
AMD3*2-10BUA-1		amd3_2_10bua_1.dxf
AMD3*2-10BUA-2		amd3_2_10bua_2.dxf
AMD3*2-10BUA-3		amd3_2_10bua_3.dxf
AMD3*2-10UR-0		amd3_2_10ur_0.dxf
AMD3*2-10UR-1		amd3_2_10ur_1.dxf
AMD3*2-10UR-2		amd3_2_10ur_2.dxf
AMD3*2-10UR-3		amd3_2_10ur_3.dxf
AMD3*2-10BUR-0		amd3_2_10bur_0.dxf
AMD3*2-10BUR-1		amd3_2_10bur_1.dxf
AMD3*2-10BUR-2		amd3_2_10bur_2.dxf
AMD3*2-10BUR-3		amd3_2_10bur_3.dxf
AMD3*2-10UK-0		amd3_2_10uk_0.dxf
AMD3*2-10UK-1		amd3_2_10uk_1.dxf
AMD3*2-10UK-2		amd3_2_10uk_2.dxf
AMD3*2-10UK-3		amd3_2_10uk_3.dxf
AMD3*2-10BUK-0		amd3_2_10buk_0.dxf
AMD3*2-10BUK-1		amd3_2_10buk_1.dxf
AMD3*2-10BUK-2		amd3_2_10buk_2.dxf
AMD3*2-10BUK-3		amd3_2_10buk_3.dxf
AMD3*2-10BUW-0		amd3_2_10buw_0.dxf
AMD3*2-10BUW-1		amd3_2_10buw_1.dxf
AMD3*2-10BUW-2		amd3_2_10buw_2.dxf
AMD3*2-10BUW-3		amd3_2_10buw_3.dxf
AMD3*2-12US-0		amd3_2_12us_0.dxf
AMD3*2-12US-1		amd3_2_12us_1.dxf
AMD3*2-12US-2		amd3_2_12us_2.dxf
AMD3*2-12US-3		amd3_2_12us_3.dxf
AMD3*2-15BUS-0		amd3_2_15bus_0.dxf
AMD3*2-15BUS-1		amd3_2_15bus_1.dxf
AMD3*2-15BUS-2		amd3_2_15bus_2.dxf
AMD3*2-15BUS-3		amd3_2_15bus_3.dxf
AMD3*2-12UJ-0		amd3_2_12uj_0.dxf
AMD3*2-12UJ-1		amd3_2_12uj_1.dxf
AMD3*2-12UJ-2		amd3_2_12uj_2.dxf
AMD3*2-12UJ-3		amd3_2_12uj_3.dxf
AMD3*2-15BUJ-0		amd3_2_15buj_0.dxf
AMD3*2-15BUJ-1		amd3_2_15buj_1.dxf
AMD3*2-15BUJ-2		amd3_2_15buj_2.dxf
AMD3*2-15BUJ-3		amd3_2_15buj_3.dxf
AMD3*2-12UP-0		amd3_2_12up_0.dxf
AMD3*2-12UP-1		amd3_2_12up_1.dxf
AMD3*2-12UP-2		amd3_2_12up_2.dxf

Product Model No.	DXF	
	Folder name	File name
AMD3*2-12UP-3	AMD3_2	amd3_2_12up_3.dxf
AMD3*2-15BUP-0		amd3_2_15bup_0.dxf
AMD3*2-15BUP-1		amd3_2_15bup_1.dxf
AMD3*2-15BUP-2		amd3_2_15bup_2.dxf
AMD3*2-15BUP-3		amd3_2_15bup_3.dxf
AMD3*2-12UA-0		amd3_2_12ua_0.dxf
AMD3*2-12UA-1		amd3_2_12ua_1.dxf
AMD3*2-12UA-2		amd3_2_12ua_2.dxf
AMD3*2-12UA-3		amd3_2_12ua_3.dxf
AMD3*2-15BUA-0		amd3_2_15bua_0.dxf
AMD3*2-15BUA-1		amd3_2_15bua_1.dxf
AMD3*2-15BUA-2		amd3_2_15bua_2.dxf
AMD3*2-15BUA-3		amd3_2_15bua_3.dxf
AMD3*2-12UR-0		amd3_2_12ur_0.dxf
AMD3*2-12UR-1		amd3_2_12ur_1.dxf
AMD3*2-12UR-2		amd3_2_12ur_2.dxf
AMD3*2-12UR-3		amd3_2_12ur_3.dxf
AMD3*2-15BUR-0		amd3_2_15bur_0.dxf
AMD3*2-15BUR-1		amd3_2_15bur_1.dxf
AMD3*2-15BUR-2		amd3_2_15bur_2.dxf
AMD3*2-15BUR-3		amd3_2_15bur_3.dxf
AMD3*2-12UK-0		amd3_2_12uk_0.dxf
AMD3*2-12UK-1		amd3_2_12uk_1.dxf
AMD3*2-12UK-2		amd3_2_12uk_2.dxf
AMD3*2-12UK-3		amd3_2_12uk_3.dxf
AMD3*2-15BUK-0		amd3_2_15buk_0.dxf
AMD3*2-15BUK-1		amd3_2_15buk_1.dxf
AMD3*2-15BUK-2		amd3_2_15buk_2.dxf
AMD3*2-15BUK-3		amd3_2_15buk_3.dxf
AMD3*2-15BUW-0		amd3_2_15buw_0.dxf
AMD3*2-15BUW-1		amd3_2_15buw_1.dxf
AMD3*2-15BUW-2		amd3_2_15buw_2.dxf
AMD3*2-15BUW-3		amd3_2_15buw_3.dxf

● AMD3*2 stainless steel body

Product Model No.	DXF	
	Folder name	File name
AMD3*2-8-0	AMD3_2_S	amd3_2_8_0.dxf
AMD3*2-8-1		amd3_2_8_1.dxf
AMD3*2-3BT-0		amd3_2_3bt_0.dxf
AMD3*2-3BT-1		amd3_2_3bt_1.dxf
AMD3*2-6S-0		amd3_2_6s_0.dxf
AMD3*2-6S-1		amd3_2_6s_1.dxf
AMD3*2-10-0		amd3_2_10_0.dxf
AMD3*2-10-1		amd3_2_10_1.dxf
AMD3*2-4BT-0		amd3_2_4bt_0.dxf
AMD3*2-4BT-1		amd3_2_4bt_1.dxf
AMD3*2-8S-0		amd3_2_8s_0.dxf
AMD3*2-8S-1		amd3_2_8s_1.dxf

File list

● AMD4*2 PFA body

Product Model No.	DXF	
	Folder name	File name
AMD4*2-20BUS-0	AMD4_2	amd4_2_20bus_0.dxf
AMD4*2-20BUS-1		amd4_2_20bus_1.dxf
AMD4*2-20BUS-2		amd4_2_20bus_2.dxf
AMD4*2-20BUS-3		amd4_2_20bus_3.dxf
AMD4*2-20BUJ-0		amd4_2_20buj_0.dxf
AMD4*2-20BUJ-1		amd4_2_20buj_1.dxf
AMD4*2-20BUJ-2		amd4_2_20buj_2.dxf
AMD4*2-20BUJ-3		amd4_2_20buj_3.dxf
AMD4*2-20BUP-0		amd4_2_20bup_0.dxf
AMD4*2-20BUP-1		amd4_2_20bup_1.dxf
AMD4*2-20BUP-2		amd4_2_20bup_2.dxf
AMD4*2-20BUP-3		amd4_2_20bup_3.dxf
AMD4*2-20BUA-0		amd4_2_20bua_0.dxf
AMD4*2-20BUA-1		amd4_2_20bua_1.dxf
AMD4*2-20BUA-2		amd4_2_20bua_2.dxf
AMD4*2-20BUA-3		amd4_2_20bua_3.dxf
AMD4*2-20BUR-0		amd4_2_20bur_0.dxf
AMD4*2-20BUR-1		amd4_2_20bur_1.dxf
AMD4*2-20BUR-2		amd4_2_20bur_2.dxf
AMD4*2-20BUR-3		amd4_2_20bur_3.dxf
AMD4*2-20BUK-0		amd4_2_20buk_0.dxf
AMD4*2-20BUK-1		amd4_2_20buk_1.dxf
AMD4*2-20BUK-2		amd4_2_20buk_2.dxf
AMD4*2-20BUK-3		amd4_2_20buk_3.dxf
AMD4*2-20BUW-0		amd4_2_20buw_0.dxf
AMD4*2-20BUW-1		amd4_2_20buw_1.dxf
AMD4*2-20BUW-2		amd4_2_20buw_2.dxf
AMD4*2-20BUW-3		amd4_2_20buw_3.dxf

● AMD4*2 stainless steel body

Product Model No.	DXF	
	Folder name	File name
AMD4*2-15-0	AMD4_2_S	amd4_2_15_0.dxf
AMD4*2-15-1		amd4_2_15_1.dxf
AMD4*2-6BT-0		amd4_2_6bt_0.dxf
AMD4*2-6BT-1		amd4_2_6bt_1.dxf
AMD4*2-12S-0		amd4_2_12s_0.dxf
AMD4*2-12S-1		amd4_2_12s_1.dxf

● AMD5*2 PFA body

Product Model No.	DXF	
	Folder name	File name
AMD5*2-25US-0	AMD5_2	amd5_2_25us_0.dxf
AMD5*2-25US-1		amd5_2_25us_1.dxf
AMD5*2-25US-2		amd5_2_25us_2.dxf
AMD5*2-25US-3		amd5_2_25us_3.dxf
AMD5*2-25BUS-0		amd5_2_25bus_0.dxf
AMD5*2-25BUS-1		amd5_2_25bus_1.dxf
AMD5*2-25BUS-2		amd5_2_25bus_2.dxf
AMD5*2-25BUS-3		amd5_2_25bus_3.dxf
AMD5*2-25UJ-0		amd5_2_25uj_0.dxf
AMD5*2-25UJ-1		amd5_2_25uj_1.dxf
AMD5*2-25UJ-2		amd5_2_25uj_2.dxf
AMD5*2-25UJ-3		amd5_2_25uj_3.dxf
AMD5*2-25BUJ-0		amd5_2_25buj_0.dxf
AMD5*2-25BUJ-1		amd5_2_25buj_1.dxf
AMD5*2-25BUJ-2		amd5_2_25buj_2.dxf
AMD5*2-25BUJ-3		amd5_2_25buj_3.dxf
AMD5*2-25UP-0		amd5_2_25up_0.dxf
AMD5*2-25UP-1		amd5_2_25up_1.dxf
AMD5*2-25UP-2		amd5_2_25up_2.dxf
AMD5*2-25UP-3		amd5_2_25up_3.dxf
AMD5*2-25BUP-0		amd5_2_25bup_0.dxf
AMD5*2-25BUP-1		amd5_2_25bup_1.dxf
AMD5*2-25BUP-2		amd5_2_25bup_2.dxf
AMD5*2-25BUP-3		amd5_2_25bup_3.dxf
AMD5*2-25BUA-0		amd5_2_25bua_0.dxf
AMD5*2-25BUA-1		amd5_2_25bua_1.dxf
AMD5*2-25BUA-2		amd5_2_25bua_2.dxf
AMD5*2-25BUA-3		amd5_2_25bua_3.dxf
AMD5*2-25UR-0		amd5_2_25ur_0.dxf
AMD5*2-25UR-1		amd5_2_25ur_1.dxf
AMD5*2-25UR-2		amd5_2_25ur_2.dxf

Product Model No.	DXF	
	Folder name	File name
AMD5*2-25UR-3	AMD5_2	amd5_2_25ur_3.dxf
AMD5*2-25BUR-0		amd5_2_25bur_0.dxf
AMD5*2-25BUR-1		amd5_2_25bur_1.dxf
AMD5*2-25BUR-2		amd5_2_25bur_2.dxf
AMD5*2-25BUR-3		amd5_2_25bur_3.dxf
AMD5*2-25UK-0		amd5_2_25uk_0.dxf
AMD5*2-25UK-1		amd5_2_25uk_1.dxf
AMD5*2-25UK-2		amd5_2_25uk_2.dxf
AMD5*2-25UK-3		amd5_2_25uk_3.dxf
AMD5*2-25BUK-0		amd5_2_25buk_0.dxf
AMD5*2-25BUK-1		amd5_2_25buk_1.dxf
AMD5*2-25BUK-2		amd5_2_25buk_2.dxf
AMD5*2-25BUK-3		amd5_2_25buk_3.dxf
AMD5*2-25BUW-0		amd5_2_25buw_0.dxf
AMD5*2-25BUW-1		amd5_2_25buw_1.dxf
AMD5*2-25BUW-2		amd5_2_25buw_2.dxf
AMD5*2-25BUW-3		amd5_2_25buw_3.dxf
AMD5*2-15AU-0		amd5_2_15au_0.dxf
AMD5*2-15AU-1		amd5_2_15au_1.dxf
AMD5*2-15AU-2		amd5_2_15au_2.dxf
AMD5*2-15AU-3		amd5_2_15au_3.dxf
AMD5*2-20AU-0		amd5_2_20au_0.dxf
AMD5*2-20AU-1		amd5_2_20au_1.dxf
AMD5*2-20AU-2		amd5_2_20au_2.dxf
AMD5*2-20AU-3		amd5_2_20au_3.dxf

● AMD5*2 stainless steel body

Product Model No.	DXF	
	Folder name	File name
AMD5*2-8BT-0	AMD5_2_S	amd5_2_8bt_0.dxf
AMD5*2-8BT-1		amd5_2_8bt_1.dxf
AMD5*2-16S-0		amd5_2_16s_0.dxf
AMD5*2-16S-1		amd5_2_16s_1.dxf

● Sister product AMD**

Product Model No.	DXF	
	Folder name	File name
AMD2-10	AMD_02	amd2_10.dxf
AMD2-10-1		amd2_10_1.dxf
AMD3-15		amd3_15.dxf
AMD3-15-1		amd3_15_1.dxf
AMD3-15-2		amd3_15_2.dxf
AMD3-15-3		amd3_15_3.dxf
AMD4-20		amd4_20.dxf
AMD4-20-1		amd4_20_1.dxf
AMD4-20-2		amd4_20_2.dxf
AMD4-20-3		amd4_20_3.dxf

File list

Manual valve

● MMD302 PFA body

Product Model No.	DXF	
	Folder name	File name
MMD302-10US	MMD302	mmd302_10us.dxf
MMD302-10BUS		mmd302_10bus.dxf
MMD302-10UJ		mmd302_10uj.dxf
MMD302-10BUJ		mmd302_10buj.dxf
MMD302-10UP		mmd302_10up.dxf
MMD302-10BUP		mmd302_10bup.dxf
MMD302-10UA		mmd302_10ua.dxf
MMD302-10BUA		mmd302_10bua.dxf
MMD302-10UR		mmd302_10ur.dxf
MMD302-10BUR		mmd302_10bur.dxf
MMD302-10UK		mmd302_10uk.dxf
MMD302-10BUK		mmd302_10buk.dxf
MMD302-10BUW		mmd302_10buw.dxf
MMD302-12US		mmd302_12us.dxf
MMD302-15BUS		mmd302_15bus.dxf
MMD302-12UJ		mmd302_12uj.dxf
MMD302-15BUJ		mmd302_15buj.dxf
MMD302-12UP		mmd302_12up.dxf
MMD302-15BUP		mmd302_15bup.dxf
MMD302-12UA		mmd302_12ua.dxf
MMD302-15BUA		mmd302_15bua.dxf
MMD302-12UR		mmd302_12ur.dxf
MMD302-15BUR		mmd302_15bur.dxf
MMD302-12UK		mmd302_12uk.dxf
MMD302-15BUK		mmd302_15buk.dxf
MMD302-15BUW		mmd302_15buw.dxf

● MMD402 PFA body

Product Model No.	DXF	
	Folder name	File name
MMD402-20BUS	MMD402	mmd402_20bus.dxf
MMD402-20BUJ		mmd402_20buj.dxf
MMD402-20BUP		mmd402_20bup.dxf
MMD402-20BUA		mmd402_20bua.dxf
MMD402-20BUR		mmd402_20bur.dxf
MMD402-20BUK		mmd402_20buk.dxf
MMD402-20BUW		mmd402_20buw.dxf

● AMD502 PFA body

Product Model No.	DXF	
	Folder name	File name
MMD502-25US	MMD502	mmd502_25us.dxf
MMD502-25BUS		mmd502_25bus.dxf
MMD502-25UJ		mmd502_25uj.dxf
MMD502-25BUJ		mmd502_25buj.dxf
MMD502-25UP		mmd502_25up.dxf
MMD502-25BUP		mmd502_25bup.dxf
MMD502-25BUA		mmd502_25bua.dxf
MMD502-25UR		mmd502_25ur.dxf
MMD502-25BUR		mmd502_25bur.dxf
MMD502-25UK		mmd502_25uk.dxf
MMD502-25BUK		mmd502_25buk.dxf
MMD502-25BUW		mmd502_25buw.dxf

● MMD302 stainless steel body

Product Model No.	DXF	
	Folder name	File name
MMD302-8-P	MMD302	mmd302_8_p.dxf
MMD302-3BT-P		mmd302_3bt_p.dxf
MMD302-6S-P		mmd302_6s_p.dxf
MMD302-10-P		mmd302_10_p.dxf
MMD302-4BT-P		mmd302_4bt_p.dxf
MMD302-8S-P		mmd302_8s_p.dxf

● MMD402 stainless steel body

Product Model No.	DXF	
	Folder name	File name
MMD402-15-P	MMD402	mmd402_15_p.dxf
MMD402-6BT-P		mmd402_6bt_p.dxf
MMD402-12S-P		mmd402_12s_p.dxf

● MMD502 stainless steel body

Product Model No.	DXF	
	Folder name	File name
MMD502-15AU	MMD502	mmd502_15au.dxf
MMD502-20AU		mmd502_20au.dxf
MMD502-8BT-P		mmd502_8bt_p.dxf
MMD502-16S-P		mmd502_16s_p.dxf

● Sister product MMD*0

Product Model No.	DXF	
	Folder name	File name
MMD20-10	MMD_0	mmd20_10.dxf
MMD20-10US/BUS		mmd20_10us_bus.dxf
MMD20-10UF/BUF		mmd20_10uf_buf.dxf
MMD20-10UA/BUA		mmd20_10ua_bua.dxf
MMD30-15		mmd30_15.dxf
MMD30-*US/BUS		mmd30_ _us_bus.dxf
MMD30-*UF/BUF		mmd30_ _uf_buf.dxf
MMD30-*UA/BUA		mmd30_ _ua_bua.dxf
MMD40-20		mmd40_20.dxf
MMD40-20BUS		mmd40_20bus.dxf
MMD40-20BUF		mmd40_20buf.dxf
MMD40-20BUA		mmd40_20bua.dxf

● Toggle valve TMD*02

Product Model No.	DXF	
	Folder name	File name
TMDZ02-6	TMD	tmdz02_6.dxf
TMDZ02-6BUS		tmdz02_6bus.dxf
TMD002-6		tmd002_6.dxf
TMD002-8BUS		tmd002_8bus.dxf
TMD302-15		tmd302_15.dxf
TMD302-*US/BUS		tmd302_ _us_bus.dxf
TMD302-*UF/BUF		tmd302_ _uf_buf.dxf
TMD302-*UA/BUA		tmd302_ _ua_bua.dxf

Drip prevention valve

● Drip prevention valve AMS

Product Model No.	DXF	
	Folder name	File name
AMSZ2-6	AMS	amsz2_6.dxf
AMSZ2-3US		amsz2_3us.dxf
AMSZ2-6BUS		amsz2_6bus.dxf
AMSZ2-3UF		amsz2_3uf.dxf
AMSZ2-3UR		amsz2_3ur.dxf
AMSZ2-6BUR		amsz2_6bur.dxf
AMS022-6		ams022_6.dxf
AMS022-6US		ams022_6us.dxf
AMS022-8BUS		ams022_8bus.dxf
AMS022-6UJ		ams022_6uj.dxf
AMS022-8BUJ		ams022_8buj.dxf
AMS022-6UP		ams022_6up.dxf
AMS022-8BUP		ams022_8bup.dxf
AMS022-6UF		ams022_6uf.dxf
AMS022-8BUF		ams022_8buf.dxf
AMS022-6UR		ams022_6ur.dxf
AMS022-8BUR		ams022_8bur.dxf
AMS022-6UK		ams022_6uk.dxf
AMS022-8BUK		ams022_8buk.dxf
AMS022-8BUW		ams022_8buw.dxf

● Integrated air-operated valve for chemical liquid/drip prevention valve AMDS

Product Model No.	DXF	
	Folder name	File name
AMDSZ0-3US-0	AMDS	amdsz0_3us_0.dxf
AMDSZ0-6BUS		amdsz0_6bus.dxf
AMDSZ0-3UF		amdsz0_3uf.dxf
AMDSZ0-3UR		amdsz0_3ur.dxf
AMDSZ0-6BUR		amdsz0_6bur.dxf
AMDS00-6US		amds00_6us.dxf
AMDS00-8BUS		amds00_8bus.dxf
AMDS00-6UJ		amds00_6uj.dxf
AMDS00-8BUJ		amds00_8buj.dxf
AMDS00-6UP		amds00_6up.dxf
AMDS00-8BUP		amds00_8bup.dxf
AMDS00-6UF		amds00_6uf.dxf
AMDS00-8BUF		amds00_8buf.dxf
AMDS00-6UR		amds00_6ur.dxf
AMDS00-8BUR		amds00_8bur.dxf
AMDS00-6UK		amds00_6uk.dxf
AMDS00-8BUK		amds00_8buk.dxf
AMDS00-8BUW		amds00_8buw.dxf

JAPAN−NETWORK

お問合せは お近くの営業所へどうぞ

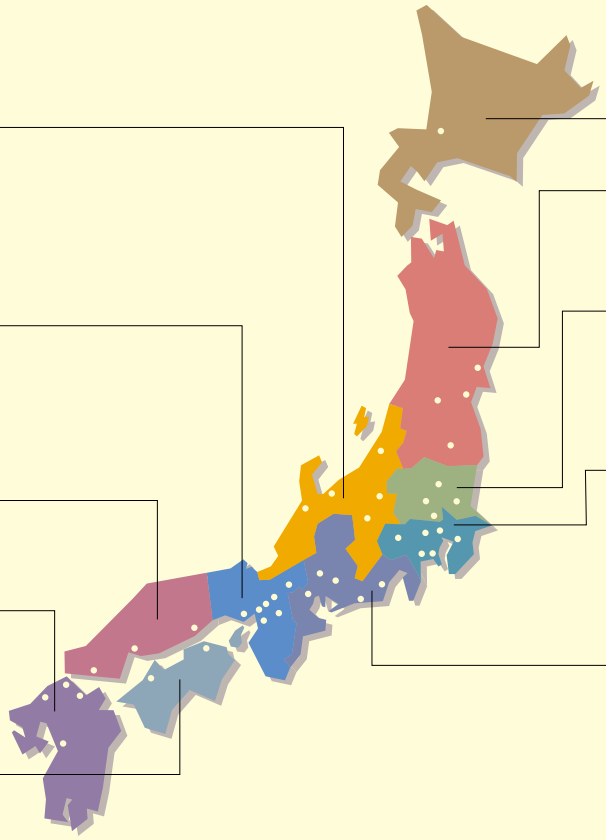

長岡営業所 TEL(0258)33-5446 FAX(0258)33-5381
上田営業所 TEL(0268)24-2392 FAX(0268)24-2394
松本営業所 TEL(0263)25-0711 FAX(0263)25-1334
富山営業所 TEL(076)421-7828 FAX(076)421-8402
金沢営業所 TEL(076)262-8491 FAX(076)262-8493

大阪営業所 TEL(06)6635-2773 FAX(06)6643-5950
大阪東営業所 TEL(06)4250-6333 FAX(06)6991-7477
堺営業所 TEL(072)253-0071 FAX(072)253-0054
滋賀営業所 TEL(077)514-2650 FAX(077)583-4198
京都営業所 TEL(075)645-1130 FAX(075)645-4747
奈良営業所 TEL(0743)57-6831 FAX(0743)57-6821
神戸営業所 TEL(078)923-2121 FAX(078)923-0212
大阪支店 TEL(06)6635-2765 FAX(06)6643-5015

広島営業所 TEL(082)285-4455 FAX(082)285-2110
岡山営業所 TEL(086)244-3433 FAX(086)241-8872
山口営業所 TEL(0835)38-3556 FAX(0835)22-6371

北九州営業所 TEL(093)964-0785 FAX(093)964-0910
福岡営業所 TEL(092)473-7136 FAX(092)473-5540
大分営業所 TEL(0979)26-0725 FAX(0979)23-6866
熊本営業所 TEL(096)340-2580 FAX(096)340-2584

高松営業所 TEL(087)834-9640 FAX(087)834-9633
松山営業所 TEL(089)931-6135 FAX(089)931-6139

札幌営業所 TEL(011)232-1760 FAX(011)232-9050

北上営業所 TEL(0197)63-4147 FAX(0197)63-4186
仙台営業所 TEL(022)239-1851 FAX(022)239-1856
山形営業所 TEL(023)644-6391 FAX(023)644-7273
郡山営業所 TEL(0249)23-6348 FAX(0249)24-0862

大宮営業所 TEL(048)652-3811 FAX(048)652-3816
茨城営業所 TEL(029)841-7490 FAX(029)841-7495
宇都宮営業所 TEL(028)638-5770 FAX(028)638-5790
太田営業所 TEL(0276)45-8935 FAX(0276)46-5628

東京営業所 TEL(03)3254-4571 FAX(03)3254-7537
立川営業所 TEL(042)527-3773 FAX(042)527-3782
千葉営業所 TEL(043)248-2815 FAX(043)248-2818
横浜営業所 TEL(045)475-3471 FAX(045)475-3470
厚木営業所 TEL(046)226-5201 FAX(046)226-5208
甲府営業所 TEL(055)224-5256 FAX(055)224-3540
東京支店 TEL(03)3254-3273 FAX(03)3256-9526

名古屋営業所 TEL(0568)73-9023 FAX(0568)75-1692
豊田営業所 TEL(0565)54-4771 FAX(0565)54-4755
静岡営業所 TEL(054)237-4424 FAX(054)237-1945
浜松営業所 TEL(053)463-3021 FAX(053)463-4910
四日市営業所 TEL(0593)51-3151 FAX(0593)51-6788
名古屋支店 TEL(0568)74-1356 FAX(0568)77-3317

CKD株式会社

北海道
- 札幌営業所 〒060-0032 札幌市中央区北2条東14-26(苗穂駅前ビル1階)

東北
- 北上営業所 〒024-0034 岩手県北上市諏訪町2-4-26
- 仙台営業所 〒984-0015 仙台市若林区卸町2-2-1(パックス2・1階)
- 山形営業所 〒990-0834 山形県山形市清住町2-6-24
- 郡山営業所 〒963-8034 福島県郡山市島1-16-9

北関東
- 大宮営業所 〒330-0812 さいたま市北区宮原町3-429-1(第一清水ビル2階)
- 茨城営業所 〒300-0847 茨城県土浦市卸町1-1-1(関鉄つくばビル4階C)
- 宇都宮営業所 〒321-0953 栃木県宇都宮市東宿郷3-1-7(NBF宇都宮ビル3階)
- 太田営業所 〒373-0813 群馬県太田市内ケ島町946-2(大槻総合ビル1階)

南関東
- 東京営業所 〒101-0047 東京都千代田区内神田3-6-3(CKD第二ビル)
- 立川営業所 〒190-0022 東京都立川市錦町3-2-30(朝日生命立川錦町ビル3階)
- 千葉営業所 〒260-0021 千葉市中央区新宿2-5-19(千葉南ビル3階)
- 横浜営業所 〒222-0033 横浜市港北区新横浜2-17-19(日総第15ビル4階)
- 厚木営業所 〒243-0035 神奈川県厚木市愛甲1212-3
- 甲府営業所 〒409-3867 山梨県中巨摩郡昭和町清水新居1509
- 東京支店 〒101-0047 東京都千代田区内神田3-6-3(CKD第二ビル)

北陸・信越
- 長岡営業所 〒940-0088 新潟県長岡市柏町1-4-33(高野不動産ビル2階)
- 上田営業所 〒386-0034 長野県上田市大字中之条323-6(NFビル103号)
- 松本営業所 〒399-0033 長野県松本市大字笹賀5945
- 富山営業所 〒939-8064 富山県富山市赤田中町494-1
- 金沢営業所 〒920-0025 石川県金沢市駅西本町3-16-8

東海
- 名古屋営業所 〒485-8551 愛知県小牧市応時2-250
- 豊田営業所 〒473-0912 愛知県豊田市広田町広田103
- 静岡営業所 〒422-8035 静岡県静岡市駿河区宮竹1-3-5
- 浜松営業所 〒435-0016 静岡県浜松市和田町438
- 四日市営業所 〒510-0064 三重県四日市市新正5-3-20
- 名古屋支店 〒485-8551 愛知県小牧市応時2-250

関西
- 大阪営業所 〒542-0073 大阪市中央区日本橋1-17-17(銀泉 日本ービル)
- 大阪東営業所 〒570-0083 大阪府守口市京阪本通1-2-3(損保ジャパン守口ビル6階)
- 堺営業所 〒591-8021 大阪府堺市新金岡町5-5-6(泉マンション1階)
- 滋賀営業所 〒524-0033 滋賀県守山市浮気町字中ノ町300-21(第2小島ビル4階)
- 京都営業所 〒612-8414 京都市伏見区竹田段川原町35-3
- 奈良営業所 〒639-1123 奈良県大和郡山市筒井町460-15(オッシェム・ロジナ1階)
- 神戸営業所 〒673-0016 兵庫県明石市松の内2-6-8(西明石スポットビル3階)
- 大阪支店 〒542-0073 大阪市中央区日本橋1-17-17(銀泉 日本ービル)

中国
- 広島営業所 〒734-0023 広島市南区東雲本町3-1-10
- 岡山営業所 〒700-0916 岡山県岡山市西之町10-104
- 山口営業所 〒747-0034 山口県防府市天神2-2-2

四国
- 高松営業所 〒760-0055 香川県高松市観光通2-2-15(ダイヤビル)
- 松山営業所 〒790-0053 愛媛県松山市竹原2-1-33(サンライト竹原1階)

九州
- 北九州営業所 〒802-0976 北九州市小倉南区南方5-13-34
- 福岡営業所 〒812-0013 福岡市博多区博多駅東1-10-27(アスティア博多ビル5階)
- 大分営業所 〒871-0015 大分県中津市牛神町1-11-1
- 熊本営業所 〒869-1103 熊本県菊池郡菊陽町久保田2799-13

本社
- 本社・工場 〒485-8551 愛知県小牧市応時2-250 TEL(0568)77-1111 FAX(0568)77-1123
- 営業本部 〒485-8551 愛知県小牧市応時2-250 TEL(0568)74-1303 FAX(0568)77-3410
- 海外営業部 〒485-8551 愛知県小牧市応時2-250 TEL(0568)74-1338 FAX(0568)77-3461

Home Page Address http://www.ckd.co.jp/

●このカタログに掲載の仕様および外観を、改善のため予告なく変更することがあります。

WORLD－NETWORK

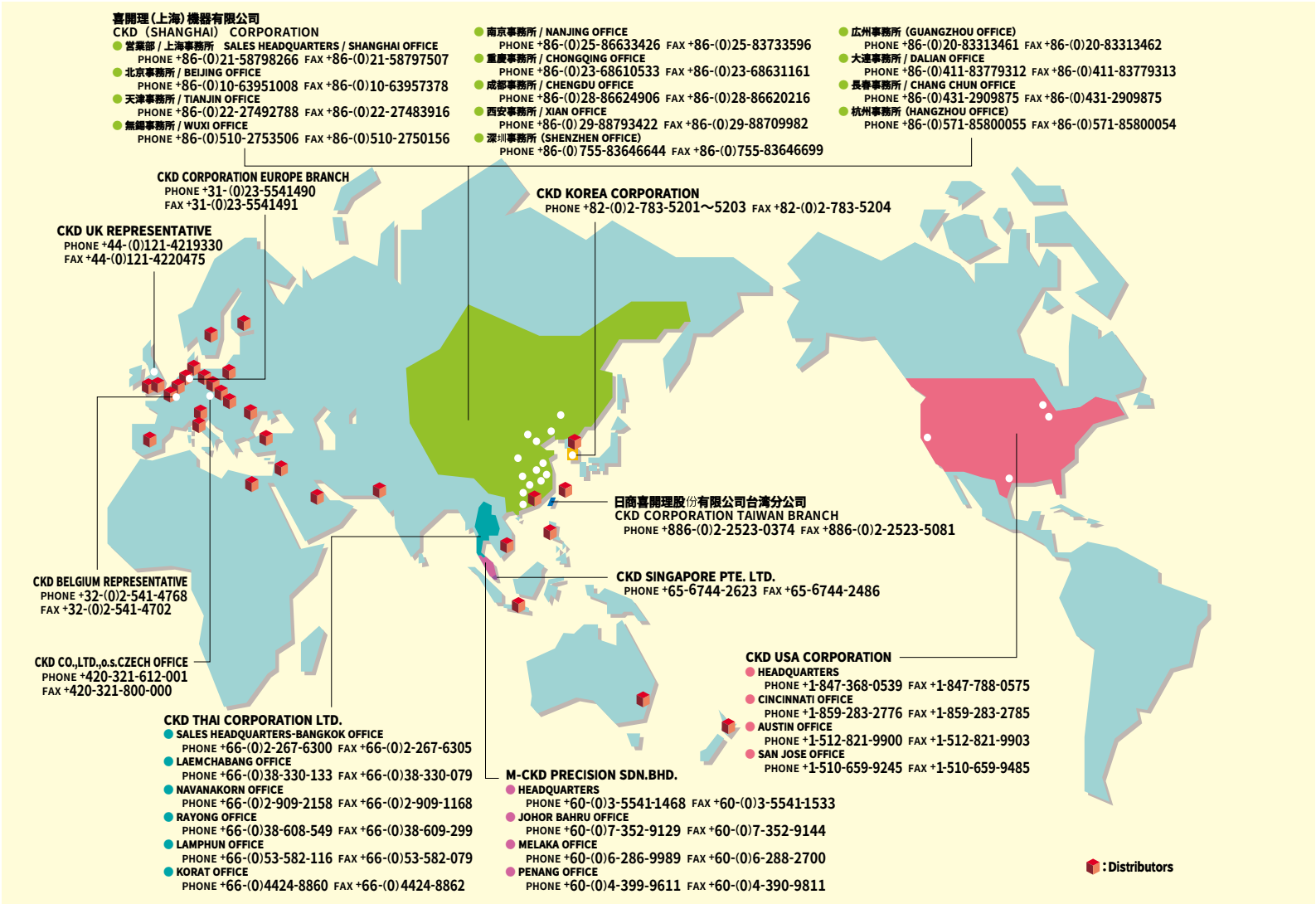

CKD Corporation

OVERSEAS DPT. SALES DIV. 2-250 Ouji Komaki, Aichi 485-8551, Japan PHONE+81-(0)568-74-1338 FAX+81-(0)568-77-3461

U.S.A
CKD USA CORPORATION

- **HEADQUARTERS**
  4080 Winnetka Avenue, Rolling Meadows, IL 60008 USA
- **CINCINNATI OFFICE**
  1420 Jamike Drive, Erlanger, KY 41018 USA
- **AUSTIN OFFICE**
  8403 Cross Park Drive, Suite 3G, Austin, TX 78754, USA
- **SAN JOSE OFFICE**
  48501 Warm Spring Boulevard, Suite 114
  Fremont, CA 94539 USA

EUROPE
CK EUROPE BRANCH

De Fruittuinen 28 Hoofddorp 2132NZ The Netherlands

Malaysia
M-CKD PRECISION SDN.BHD.

- **HEADQUARTERS**
  Lot No.6,Jalan Modal 23/2, Seksyen 23, Kawasan, MIEL, Fasa 8, 40300 Shah Alam,Selangor Darul Ehsan, Malaysia
- **JOHOR BAHRU OFFICE**
  116&118 Jalan Rosmerah 2/17, Taman Johor Jaya, 81100 Johor Bahru, Malaysia
- **MELAKA OFFICE**
  No.B-10, Ground Floor, Bachang Permai, Jalan Tun Fatimah Batu Berendam 75350 Melaka, Malaysia
- **PENANG OFFICE**
  No.2678, Ground Floor, Jalan Chain Ferry, Taman Inderwasih, 13600 Prai, Penang, Malaysia

Thailand
CKD THAI CORPORATION LTD.

- **SALES HEADQUARTERS-BANGKOK OFFICE**
  Suwan Tower, 14/1 Soi Saladaeng 1, North Sathorn Rd., Bangrak, Bangkok 10500 Thailand
- **LAEMCHABANG OFFICE**
  53/67, 69 Moo 9, Tungsukla, Sriracha, Chonburi 20230 Thailand
- **NAVANAKORN OFFICE**
  176/4-6, Moo 13, Paholyothin Rd., Klongneung, Klongluang, Prathumthani 12120 Thailand
- **RAYONG OFFICE**
  125/32 M.Charoen Nakorn, T.Maptapud, Rayong 21150, Thailand
- **LAMPHUN OFFICE**
  133 Moo 4, Banklang Muang, Lamphun, 51000, Thailand
- **KORAT OFFICE**
  982/3-4 Mittraphab Rd., Naimuang, Muang, Nakhonratchasima 30000, Thailand

Singapore
CKD SINGAPORE PTE LTD.

705 Sims Drive #03-01/02, Shun Li Industrial Complex, 387384 Singapore

Taiwan
日商喜開理股份有限公司台湾分公司
CKD CORPORATION TAIWAN BRANCH

中華民国台湾省台北市中山北路二段96號嘉新大楼第14楼1405室
Rm.1405, 14F, No.96, Sec.2, Chung Shan N.Rd., Taipei, Taiwan, R.O.C.

China
喜開理（上海）機器有限公司
CKD (SHANGHAI) CORPORATION

- **営業部/上海事務所（SALES HEADQUARTERS / SHANGHAI OFFICE）**
  中国上海市浦東新区張楊路188号　湯臣商務中心3楼304室
  Room 304, 3'rd Floor, Tomson Business Center, No.188, ZhangYang Road, PuDong, ShangHai, 200120, China
- **北京事務所（BEIJING OFFICE）**
  中国北京市復興路戊12号 恩菲科技大厦1015室
  En-Fei-Ke-Ji Bdg. Room #1015, Fu-xing-Lu-Wu 12, Beijing,100038, China
- **天津事務所（TIANJIN OFFICE）**
  中国天津市南開区白堤路148号
  Bai-Di-Lu, 148, Nankai-Qu, Tianjin, 300193, China
- **無錫事務所（WUXI OFFICE）**
  中国江蘇省無錫市中山路389号吟春大厦1708室
  Room 1708, Yin-Chun Bdg., Zhongshan Road No.389, Wuxi, Jiangsu Province, 214001,China
- **南京事務所（NANJING OFFICE）**
  中国南京市山西路57号杰源山西路商務中心502室
  Room 502, Jieyuan Shanxi Road Business Center No.57, Shanxi Road, Nanjing, 210009, China
- **重慶事務所（CHONGQING OFFICE）**
  中国重慶市石橋舗楡洲路8号秦興科技広場1634号
  Taixing Keji Square Room 1634, Yuzhou Road No. 8 Shiqiaopu, ChongQing, 400039, China
- **成都事務所（CHENGDU OFFICE）**
  中国四川省成都市西玉龍街210号成都外貿大厦22楼2207号
  Chengdu Waimao Bdg. 22F, Room #2207, Xi-Yu-Long-Jie 210, Chengdu city, Sichuan Prov., 610015, China
- **西安事務所（XIAN OFFICE）**
  中国陝西省西安市労働南路296号西北民航大厦610号
  Xi-bei-min-hang Bldg. Room #610, Lao-dong-nan-lu 296, Xian city, Shangxi Prov., 710082, China
- **深圳事務所（SHENZHEN OFFICE）**
  中国広東省深圳市華富路1006号航都大厦7B単元
  HangDu Building 7B, No.1006 HuaFu Road, Shenzhen, 518031, China
- **広州事務所（GUANGZHOU OFFICE）**
  中国広東省広州市環市東路339号広東国際大酒店A楼24C
  Guangdong Guoji Dajiudian A-24C, No.339, Huanshidong-Lu, Guangzhou City, Guangdong, 510098 China
- **大連事務所（DALIAN OFFICE）**
  中国遼寧省大連市西崗区新開路99号大連珠江国際大厦808室
  DaLian ZhuJiang GuoJi-Bld. Room #808, XinKai-Lu 99, DaLian city, LiaoNing Province, 116011, China
- **長春事務所（CHANG CHUN OFFICE）**
  中国吉林省長春市長春一汽越野路16号単元4楼中門16-1
  16-1Dan Yuan 4-Lou Zhong Men, 16, Chang Chun Yi Qi Yue Ye Lu, Chang Chun City, JiLin Province, 130011, China
- **杭州事務所（HANGZHOU OFFICE）**
  中国浙江省杭州市分曜路108号浙江省出版印刷大厦410室
  Zhejiangsheng Chuban Yinshua Daxia Room 410, No.108, Fenhui-Lu, Hangzhou City, Zhejiang, 310004 China

Korea
CKD KOREA CORPORATION

Room No.1105, 11th FL, The Korea Teachers Pention B/L. 27-2, Yoido-Dong, Youngdeungpo-Gu, Seoul, 150-742, Korea

Home Page Address http://www.ckd.co.jp/

●Specifications are subject to change without notice.

2006.1.DCC