Vacuum pad
VSP

■ **Pneumatic components**

CONTENTS

Series variation	240
● Compact type (VSP-M*-various pads shapes)	246
● Standard, general type (VSP-*R)	258
● Standard, deep type (VSP-*A)	258
● Sponge type (VSP-*S)	280
● Bellows type (VSP-*B)	290
● Multi-level, bellows type (VSP-*W)	300
● Oval type (VSP-*E)	310
● Soft type (VSP-*L)	324
● Soft bellows type (VSP-*LB)	338
● Nonskid type (VSP-*K*)	352
● Thin type (VSP-*P)	360
● Long stroke type (VSP-various pads shapes)	368

Vacuum pad

Series variation

○: Option

Pad shape	Holder shape: With buffer	Holder shape: Vacuum outlet		Pad size	Pad material	Free holder (swinging)	Position locking valve	Page
Compact vacuum pad: VSP-M* various pads shapes ・Space conserved by downsizing existing holder	<Small> None (fixed type)	Top/joint Side/joint Direct mount type		● Standard small type (ø0.7, ø1, ø1.5, ø2, ø3, ø4) is added to conventional pad type series	● Material for compact type Nitrile rubber, silicon rubber, urethane rubber, Fluoro rubber, antistatic silicon rubber, Antistatic butadiene rubber, Food Sanitation Law compliant NBR		○	246
Standard type (General type): VSP-*R ・Ideal for thick, flat work pieces	None (fixed type)	Top/joint Side/joint Direct mount type		ø1, ø2, ø3, ø4, ø6, ø8, ø10, ø15, ø20, ø25 ø30, ø40, ø50, ø60, ø80, ø100, ø150, ø200	Nitrile rubber, silicon rubber, Urethane rubber, fluoro rubber, Antistatic silicon rubber, Antistatic butadiene rubber, Food Sanitation Law compliant NBR	○	○	258
	None (with stopper)	Top/joint Side/joint Direct mount type						
Standard type (Deep type): VSP-*A ・Ideal for picking up round balls, etc.	None (fixed type)	Top/joint Side/joint Direct mount type		ø15, ø20, ø25, ø30, ø40, ø50, ø60, ø80, ø100	Nitrile rubber, silicon rubber, Urethane rubber, fluoro rubber, Antistatic silicon rubber, Antistatic butadiene rubber, Food Sanitation Law compliant NBR	○	○	258
	None (with stopper)	Top/joint Side/joint Direct mount type						
Sponge type: VSP-*S ・Ideal for workpieces with uneven surfaces, such as exterior walls	None (fixed type)	Top/joint Side/joint		ø10, ø15, ø20, ø20, ø30, ø35, ø50, ø70, ø100	Cloroplane rubber	○	○	280
	Provided (with stopper)	Top/joint Side/joint Direct mount type						
Bellows type: VSP-*B ・Ideal for soft workpieces, such as paper or vinyl-packed products	None (fixed type)	Top/joint Side/joint		ø10, ø20, ø30, ø40, ø50, ø80	Nitrile rubber, Silicon rubber, Antistatic silicon rubber	○	○	290
	Provided (with stopper)	Top/joint Side/joint Direct mount type						
Multi-level bellows type: VSP-*W ・Ideal for transferring inclined work pieces or vinyl-packed products	None (fixed type)	Top/joint Side/joint		ø10, ø20, ø30, ø40, ø50	Nitrile rubber, Silicon rubber, Food Sanitation Law compliant NBR		○	300
	Provided (with stopper)	Top/joint Side/joint Direct mount type						
Oval type: VSP-*E ・Ideal for workpieces with limited suction space, such as IC circuit boards	None (fixed type)	Top/joint Side/joint		4 x 10, 4 x 20, 4 x 30, 5 x 10, 5 x 20, 5 x 30, 6 x 10, 6 x 20, 6 x 30, 8 x 20, 8 x 30	Nitrile rubber, Silicon rubber, Antistatic butadiene rubber	○	○	310
	None (screw fixed type)	Top/joint Side/joint Direct mount type						
	Provided (with stopper)	Top/joint Side/joint						
Soft type: VSP-*L ・Ideal for unloading molded parts, and transferring delicate workpieces	None (fixed type)	Top/joint Side/joint Side/joint (Direct mounting type)		ø4, ø6, ø8, ø10, ø15, ø20, ø30, ø40	Nitrile rubber, silicon rubber, Fluoro silicon rubber, Antistatic silicon rubber	○	○	324
	Provided (with stopper)	Top/joint Side/joint Direct mount type						
	Provided (without stopper)	Top/joint Side/joint						
Soft bellows type: VSP-*LB ・Ideal for unloading molded parts, and picking up paper, etc.	None (fixed type)	Top/joint Side/joint Side/joint (Direct mounting type)		ø6, ø8, ø10, ø15, ø20	Nitrile rubber, Silicon rubber	○	○	338
	Provided (with stopper)	Top/joint Side/joint Direct mount type						
	Provided (without stopper)	Top/joint Side/joint						
Nonskid type: VSP-*K* ・Ideal of workpieces covered with oil, such as pressed parts	None (fixed type)	Top/joint Side/joint		ø10, ø20, ø30, ø40, ø50	Oil-resistant NBR	○	○	352
	Provided (with stopper)	Top/joint Side/joint Direct mount type						
Thin type: VSP-*P ・Ideal for transferring thin workpieces, such as photocopy paper and vinyl	None (fixed type)	Top/joint Side/joint Direct mount type		ø8, ø10, ø15, ø20	Nitrile rubber, Fluoro silicon rubber			360
	Provided (with stopper)	Top/joint Side/joint Direct mount type						
Long stroke: VSP various pads shapes ・Ideal when distance from pad to workpiece is not specific				● Corresponding pad shape Standard type (general), Bellows type, Oval type Standard type (deep), Nonskid type, Sponge type	● Compatible stroke 10mm, 15mm, 20mm, 30mm, 40mm, 50mm	○	○	368

How to select vacuum pad

Theoretical lift force (General pad)

■ Theoretical lift force is obtained with the pad area and the vacuum generated when using that pad.

<kPa, N display>

$$W = \frac{C \times P}{101} \times 10.13 \times f$$

W: Theoretical lift force (N)
C: Pad area (cm^2)
P: Vacuum (-kPa)
f: Safety factor

(mmHg, kg display)

$$W = \frac{C \times P}{760} \times 1.0332 \times f$$

W: Theoretical lift force (kg)
C: Pad area (cm^2)
P: Vacuum (-mmHg)
f: Safety factor

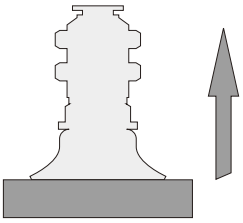

Horizontal suspension

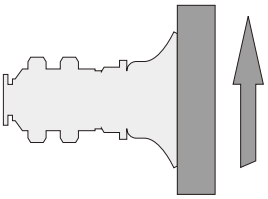

Vertical suspension

*1: When using a sponge pad, the value is calculated with the inner diameter of the sponge pad so see the separate table.
*2: Due to the characteristics of the pad, the lift force of the bellows type (multistage bellows) and soft type (soft bellows) pad may differ from the theoretical lift force.
*3: The theoretical lift force is a value calculated under static conditions. When actually using the value, provide a 1/4 safety factor for the horizontal suspension, and a 1/8 safety factor for a vertical suspension. Acceleration when moving must also be considered. (Refer to the drawing at right.)

● General pad (rubber pad)

・Pad diameter: ø2mm to ø15mm

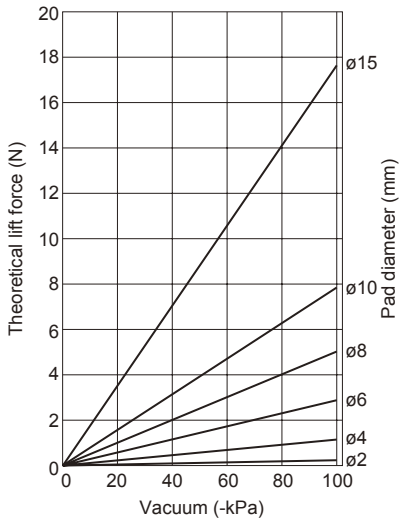

・Pad diameter: ø20mm to ø50mm

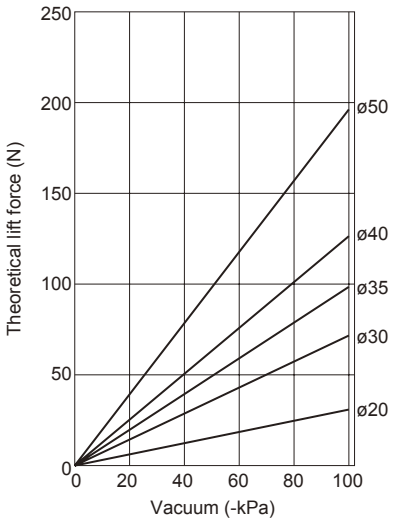

・Pad diameter: ø60mm to ø200mm

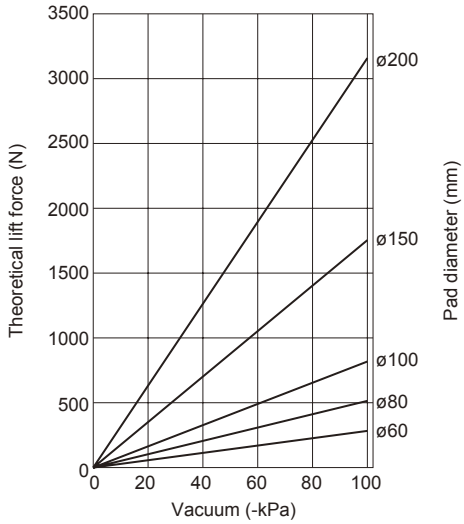

● Oval pad

・Pad diameter: * x 10mm, * x 20mm, * x 30mm

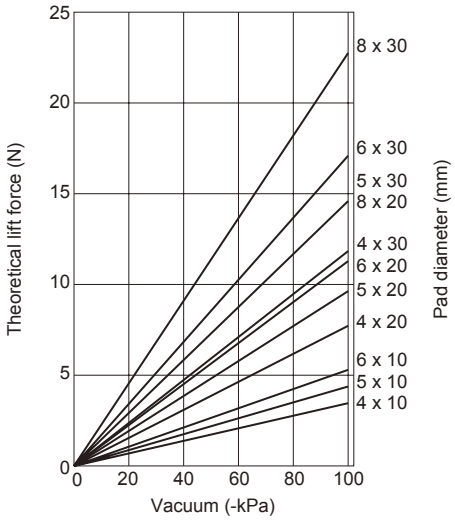

● Sponge pad

・Pad diameter: ø10mm to ø100mm

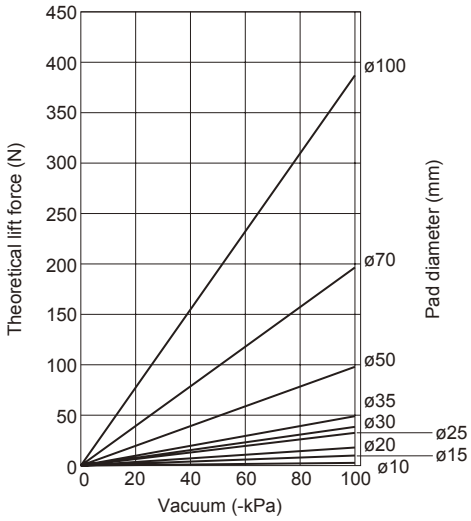

Selection guide

■ Characteristics of each pad

Item \ Pad material			Nitrile rubber	Silicon rubber	Urethane rubber	Fluorine rubber	Fluoro silicon rubber	Butadiene rubber (low-resistance type)	Cloroplane rubber (sponge type)
			NBR	Si	U	FKM	FSi	BR	CR
Pad color			Black*2	White	Blue	Gray	Light blown	Black	Black
Properties	Surface hardness (Shear A)		40 to 60	40 to 50	60	60	40	60	-
	High temperature working limit temperature		110	180	60	230	180	100	80
	Low temperature working limit temperature		-30	-40	-20	-10	-50	-50	-45
	Weather resistance		△	◎	○	○	○	○	○
	Ozone resistance		△	◎	◎	◎	◎	X	○
	Acid resistance		△	○	X	◎	○	△	△
	Alkaline resistance		○	◎	X	X	◎	○	◎
	Oil resistance	(Gasoline, light oil)	◎	△	◎	◎	△	X	X
		(Benzene, toluene)	△	△	△	◎	△	X	△

Reading the evaluation ⇒ ◎: Best, ○: Appropriate, △: Acceptable, X: Incompatible
*1: The surface resistance rate of the low resistance pad is 200 Ω or less.
*2: Food Sanitation Law compliant pads are in gray.
Note 1: The listed properties are the characteristics of typical synthetic rubber used for pad materials.
Note 2: The working limit temperature is an instant temperature. This must be carefully confirmed if the temperature continues for a set time.

■ Sucking up a spherical surface (deep pad)

Minimum pickup diameter

Pad diameter (mm)	ø15	ø20	ø25	ø30	ø40	ø50	ø60	ø80	ø100
Sphere diameter (ø Smm)	20	30	40	50	80	100	120	160	200

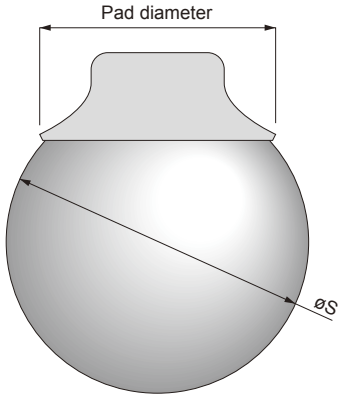

Pad diameter conformity table according to material

Material / Pad diameter	N Nitrile						
	Standard (general type)	Standard (deep type)	Bellows type	Multi-level bellows	Soft type	Soft bellows	Thin type
1	●						
2	●						
3	●						
4	●				●		
6	●				●	●	
8	●				●	●	●
10	●		●	●	●	●	●
15	●	●			●	●	●
20	●	●	●	●	●	●	●
25	●	●					
30	●	●	●	●	●		
35							
40	●	●	●	●	●		
50	●	●	●	●			
60	●	●					
70							
80	●	●	●				
100	●	●					
150	●						
200	●						

Material / Pad diameter	S Silicon						FS Fluoro silicon	
	Standard (general type)	Standard (deep type)	Bellows type	Multi-level bellows	Soft type	Soft bellows	Soft type	Thin type
1	●							
2	●							
3	●							
4	●				●		●	
6	●				●	●	●	
8	●				●	●	●	●
10	●		●	●	●	●	●	●
15	●	●			●	●	●	●
20	●	●	●	●	●	●	●	●
25	●	●						
30	●	●	●	●	●		●	
35								
40	●	●	●	●	●		●	
50	●	●	●	●				
60	●	●						
70								
80	●	●	●					
100	●	●						
150	●							
200	●							

Material / Pad diameter	U Urethane		F Fluorine rubber		SE Antistatic rubber			E Antistatic rubber (low- resistance type)
	Standard (general type)	Standard (deep type)	Standard (general type)	Standard (deep type)	Standard (general type)	Bellows type	Soft type	Standard (general type)
1	●		●		●			●
2	●		●		●			●
3	●		●		●			●
4	●		●		●		●	●
6	●		●		●		●	●
8	●		●		●		●	●
10	●		●		●	●	●	●
15	●	●	●	●	●		●	●
20	●	●	●	●	●	●	●	●
25	●	●	●	●	●			●
30	●	●	●	●	●	●	●	●
35								
40	●	●	●	●	●	●	●	●
50	●	●	●	●	●	●		●
60	●	●	●	●				
70								
80	●	●	●	●				
100	●	●	●	●				
150	●		●					
200	●		●					

Material / Pad diameter	G Food Sanitation Law compliant NBR			Cloroplane rubber	KNH Oil-resistant NBR
	Standard (general type)	Standard (deep type)	Multi-level bellows	Sponge type	Nonskid type
1	●				
2	●				
3	●				
4	●				
6	●				
8	●				
10	●		●	●	●
15	●	●		●	
20	●	●	●	●	●
25	●	●		●	
30	●	●	●	●	●
35				●	
40	●	●	●		●
50	●		●	●	●
60					
70				●	
80					
100				●	
150					
200					

Vacuum pad for flat work piece and sphere
Vacuum pad standard type (general type/deep type)

VSP-*R*, *A* Series

● Pad diameter: ø1 to ø200

RoHS

Features

■ This standard vacuum pad is available in a variety of pad diameters, pad materials, and holder shapes.

- Pad diameter: ø1mm, ø2mm, ø3mm, ø4mm, ø6mm, ø8mm, ø10mm, ø15mm, ø20mm, ø25mm, ø30mm, ø40mm, ø50mm, ø60mm, ø80mm, ø100mm, ø150mm, ø200mm
- Pad material: Nitrile rubber, silicon rubber, urethane rubber, fluoric rubber, antistatic rubber (low-resistance type), Food Sanitation Low compliant type (NBR)
- Pad shape: 2 types (general, deep)
- Holder shape: 6 types

Application

Standard type (general type)

● Flat workpieces
(Hard and stiff work pieces)

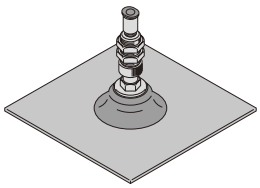

Standard type (deep type)

● Round fruit (apples, etc.) or balls

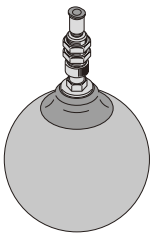

How to order

*Refer to the table on pages 262 to 278 for the model combination.

● Vacuum pad/standard type general type (R), deep type (A)

VSP - A 40 R N —— 6T - ◯ - V

● Pad rubber only/standard type general type (R), deep (A)

VSPG —— 40 R N A

Ⓐ Holder shape

Ⓑ Pad diameter

Ⓒ Pad shape

Ⓓ Pad material

Ⓔ Frame

Ⓕ Port size/shape

Ⓖ Free holder (swinging)

Ⓗ Position locking valve

Symbol	Descriptions
Ⓐ Holder shape Note 2	
A	Fixed type top vacuum outlet
B	Fixed type side vacuum outlet
C	With buffer top vacuum outlet
D	With buffer side vacuum outlet
E	Direct mount fixed type
F	Direct mount type with buffer
Ⓑ Pad type Note 1, 2	
See Appendix Table 1 for the pad diameter.	
Ⓒ Pad shape	
R	Standard general type
A	Standard deep type
Ⓓ Pad material	
N	Nitrile rubber
S	Silicon rubber
U	Urethane rubber
F	Fluorine rubber
SE	Antistatic silicon rubber
E	Antistatic boutadiene rubber (low resistance type)
G	Food Sanitation Law compliant NBR
Ⓔ Frame	
Blank	Without frame
A	With frame
Ⓕ Port size/shape Note 1	
4	ø4 push-in joint
4T	ø4 barbed joint
6	ø6 push-in joint
6T	ø6 barbed joint
6A	Rp1/8
8A	Rp1/4
Ⓖ Free holder (swinging) Note 1, Note 3 Page 417	
F1	With free holder 30° swinging angle type
F2	With free holder 15° swinging angle type
Blank	No free holder
Ⓗ Position locking valve Note 2, 3 Page 422	
V	With position locking valve
Blank	Without

⚠ Note on model no. selection

Note 1: Item Ⓑ 10 to 100 is selected for Item Ⓖ "F1" and "F2".

Note 2: Item Ⓗ "V" is selected only for Item Ⓐ "E" when 1 to 8 is selected for Item Ⓑ.
Item Ⓐ "E" cannot be selected when 10 to 50 is selected for Item Ⓑ.
This cannot be selected when Item Ⓑ is 60 to 200.

Note 3: Item Ⓖ "F1" and "F2" and Item Ⓗ "V" cannot be selected at the same time.

Note 4: See page 417 for details on the free holder (F1, F2), and page 422 for details on the position locking valve (V). See the list of target vacuum pads (page 424) for details on applicable pad sizes and shapes.

● Pad diameter/shape/material combination table

Pad shape		General type (R)							Deep type (A)						
Pad material		N	S	U	F	SE	E	G	N	S	U	F	SE	E	G
Pad diameter	ø1	●	●	●	●	●	●	●							
	ø2	●	●	●	●	●	●	●							
	ø3	●	●	●	●	●	●	●							
	ø4	●	●	●	●	●	●	●							
	ø6	●	●	●	●	●	●	●							
	ø8	●	●	●	●	●	●	●							
	ø10	●	●	●	●	●	●	●							
	ø15	●	●	●	●	●	●	●	●	●	●	●			●
	ø20	●	●	●	●	●	●	●	●	●	●	●			●
	ø25	●	●	●	●	●	●	●	●	●	●	●			●
	ø30	●	●	●	●	●	●	●	●	●	●	●			●
	ø40	●	●	●	●	●	●	●	●	●	●	●			●
	ø50	●	●	●	●	●	●	●	●	●	●	●			
	ø60	●	●	●	●				●	●	●	●			
	ø80	●	●	●	●				●	●	●	●			
	ø100	●	●	●	●				●	●	●	●			
	ø150	●	●	●	●										
	ø200	●	●	●	●										

Appendix Table 1

Pad diameter			
Symbol	1	2	3
Pad diameter (mm)	ø1	ø2	ø3
Symbol	4	6	8
Pad diameter (mm)	ø4	ø6	ø8
Symbol	10	15	20
Pad diameter (mm)	ø10	ø15	ø20
Symbol	25	30	40
Pad diameter (mm)	ø25	ø30	ø40
Symbol	50	60	80
Pad diameter (mm)	ø50	ø60	ø80
Symbol	100	150	200
Pad diameter (mm)	ø100	ø150	ø200

Characteristic of pad materials

Item			Nitrile rubber	Silicon rubber	Urethane rubber	Fluorine rubber	Butadiene rubber *1 (low-resistance type)
			NBR	Si	U	FKM	BR
Pad color			Black *2	White	Blue	Gray	Black
Properties	Surface hardness (Shear A)		40 to 60	40 to 50	60	60	60
	High temperature working limit temperature		110	180	60	230	100
	Low temperature working limit temperature		-30	-40	-20	-10	-50
	Weather resistance		△	◎	○	○	○
	Ozone resistance		△	◎	◎	◎	X
	Acid resistance		△	○	X	◎	△
	Alkaline resistance		○	◎	X	X	○
	Oil resistance	(Gasoline, light oil)	◎	△	◎	◎	X
		(Benzene, toluene)	△	△	△	◎	X

Reading the evaluation ⇒ ◎: Best, ○: Appropriate, △: Acceptable, X: Incompatible
*1: the surface resistance rate of the low resistance pad is 200 Ω or less.
*2: Food Sanitation Law compliant pads are in gray.
Note 1: The listed properties are the characteristics of typical synthetic rubber used for materials.
Note 2: The working limit temperature is an instant temperature. This must be carefully confirmed if the temperature continues for a set time.

● Sucking up a spherical surface (deep pad)
Minimum pickup diameter

Pad diameter (mm)	ø15	ø20	ø25	ø30	ø40	ø50	ø60	ø80	ø100
Sphere diameter (ø Smm)	20	30	40	50	80	100	120	160	200

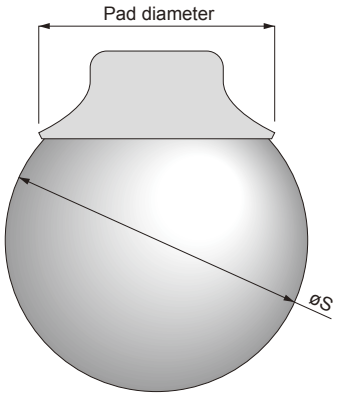

Theoretical lift force

● General pad (rubber pad)

・Pad diameter: ø2mm to ø15mm

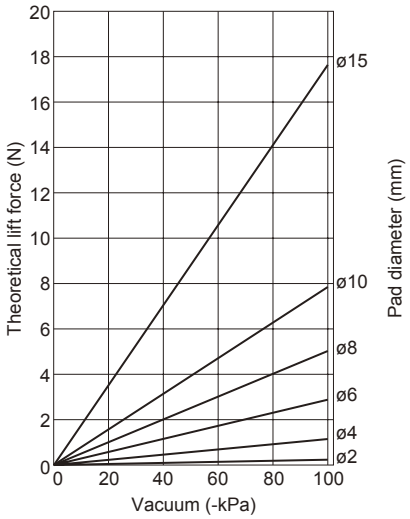

・Pad diameter: ø20mm to ø50mm

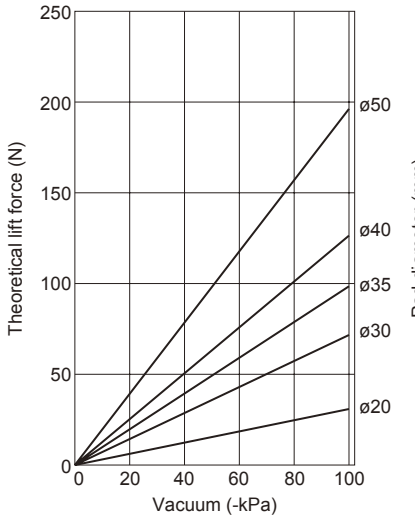

・Pad diameter: ø60mm to ø200mm

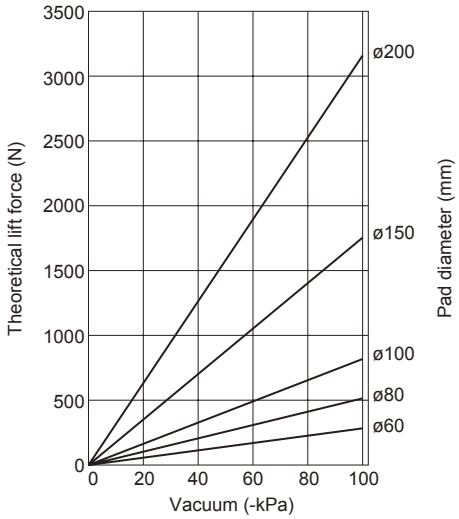

Table of pad materials according to pad diameter

Pad material / Pad diameter	Nitrile rubber (N)	Silicon rubber (S)	Urethane rubber (U)	Fluorine rubber (F)	Antistatic rubber (SE)	Antistatic rubber (low-resistance type) (E)	Food Sanitation Law compliant NBR (G)
ø1mm	○	○	○	○	○	○	○
ø2mm	○	○	○	○	○	○	○
ø3mm	○	○	○	○	○	○	○
ø4mm	○	○	○	○	○	○	○
ø6mm	○	○	○	○	○	○	○
ø8mm	○	○	○	○	○	○	○
ø10mm	○	○	○	○	○	○	○
ø15mm	○	○	○	○	○	○	○
ø20mm	○	○	○	○	○	○	○
ø25mm	○	○	○	○	○	○	○
ø30mm	○	○	○	○	○	○	○
ø40mm	○	○	○	○	○	○	○
ø50mm	○	○	○	○	○	○	○
ø60mm	○	○	○	○	-	-	-
ø80mm	○	○	○	○	-	-	-
ø100mm	○	○	○	○	-	-	-
ø150mm	○	○	○	○	-	-	-
ø200mm	○	○	○	○	-	-	-

Dimensions (fixed type, top vacuum outlet VSP-A, push-in joint type)

● VSP-A1R*

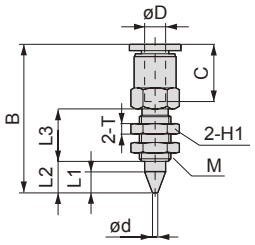

● VSP-A2 to 4R*

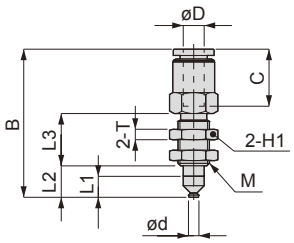

● VSP-A6/8R*

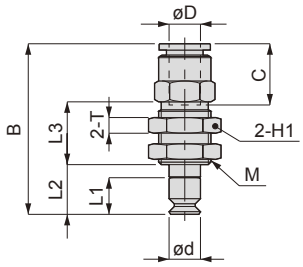

● VSP-A10R*

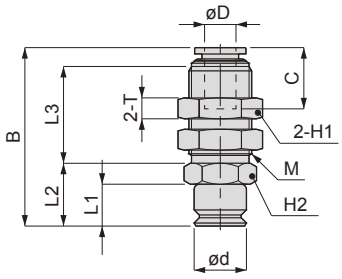

● VSP-A15 to 50R (A)*

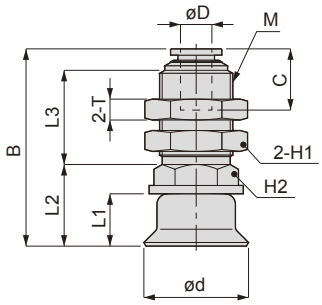

● VSP-A60 to 200R*

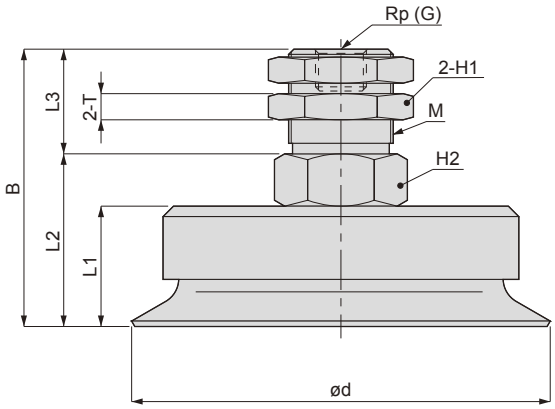

Unit: mm

Model No.	Tube O.D. øD	Pad diameter ød	Rp (G)	Set screw M	B	L1	L2	L3	C	Opposite side H1	Opposite side H2	T	Weight (g)
VSP-A 1R*-4	4	1	-	M6 x 0.75	28.6	4	6	10	11.2	8	-	2	6
VSP-A 2R*-4	4	2	-	M6 x 0.75	28.6	4	6	10	11.2	8	-	2	6
VSP-A 3R*-4	4	3	-	M6 x 0.75	28.6	4	6	10	11.2	8	-	2	6
VSP-A 4R*-4	4	4	-	M6 x 0.75	28.6	4	6	10	11.2	8	-	2	6
VSP-A 6R*-6	6	6	-	M10 x 1	32.8	7	9.5	12	11.9	12	-	3	12.5
VSP-A 8R*-6	6	8	-	M10 x 1	31.3	5.5	8	12	11.9	12	-	3	12.5
VSP-A 10R*-6	6	10	-	M12 x 1	34.3	8	12	18.5	11.9	14	12	4	21
VSP-A 15R(A)*-6	6	15	-	M12 x 1	35.3 (36.3)	9 (10)	13 (14)	18.5	11.9	14	12	4	21.5
VSP-A 20R(A)*-6	6	20	-	M14 x 1	37.9 (38.9)	10 (11)	15.6 (16.5)	18	11.9	17	14	4	36.5
VSP-A 25R(A)*-6	6	25	-	M14 x 1	38.9 (39.9)	11 (12)	16.6 (17.5)	18	11.9	17	14	4	37
VSP-A 30R(A)*-6	6	30	-	M14 x 1	38.9 (41.9)	11 (14)	16.6 (19.5)	18	11.9	17	14	4	39
VSP-A 40R(A)*-6	6	40	-	M14 x 1	41.9 (45.4)	14 (17.5)	19.6 (23)	18	11.9	17	14	4	46 (47)
VSP-A 50R(A)*-6	6	50	-	M14 x 1	42.9 (45.9)	15 (18)	20.6 (23.5)	18	11.9	17	14	4	52 (53.5)
VSP-A 60R(A)*-6A	-	60	1/8	M20 x 1	50.6 (57.6)	18 (25)	30.6 (37.5)	20	-	24	22	5	133 (132.5)
VSP-A 80R(A)*-6A	-	80	1/8	M20 x 1	53 (63)	23 (33)	33 (43)	20	-	24	22	5	217 (225.5)
VSP-A 100R(A)*-6A	-	100	1/8	M20 x 1	55 (64)	25 (34)	35 (44)	20	-	24	22	5	306.5 (312.5)
VSP-A 150R(A)*-8A	-	150	1/4	M24 x 2	95	45	65	30	-	30	27	10	923
VSP-A 200R(A)*-8A	-	200	1/4	M24 x 2	100	50	70	30	-	30	27	10	1402.5

Note 1: Values in ( ) are for deep pad dimensions.
Note 2: The pad rubber material is indicated in * of the dimensions table. Refer to page 260 for details on the pad rubber material.

Dimensions (fixed type, top vacuum outlet VSP-A, barbed joint type)

● VSP-A1R*

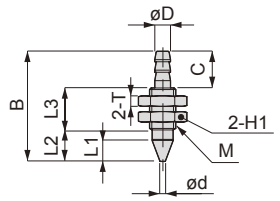

● VSP-A2 to 4R*

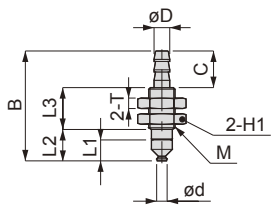

● VSP-A6/8R*

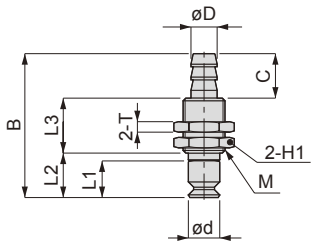

● VSP-A10R*

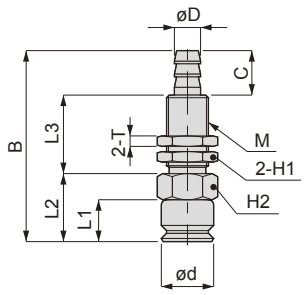

● VSP-A15 to 50R (A)*

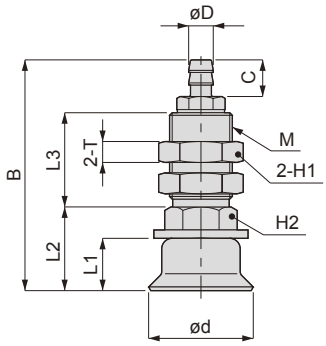

Unit: mm

Model No.	Tube O.D. x I.D. øD	Pad diameter ød	Set screw M	B	L1	L2	L3	C	Opposite side H1	Opposite side H2	T	Weight (g)
VSP-A 1R*-4T	4 x 2.5	1	M5 x 0.5	21	4	6	8	7	8	-	2	3
VSP-A 2R*-4T	4 x 2.5	2	M5 x 0.5	21	4	6	8	7	8	-	2	3
VSP-A 3R*-4T	4 x 2.5	3	M5 x 0.5	21	4	6	8	7	8	-	2	3
VSP-A 4R*-4T	4 x 2.5	4	M5 x 0.5	21	4	6	8	7	8	-	2	3
VSP-A 6R*-6T	6 x 4	6	M8 x 0.75	27.5	7	8.5	10.5	8.5	10	-	2	7
VSP-A 8R*-6T	6 x 4	8	M8 x 0.75	26	5.5	7	10.5	8.5	10	-	2	7
VSP-A 10R*-6T	6 x 4	10	M8 x 0.75	36.5	8	13	15	8.5	10	10	2	11.5
VSP-A 15R(A)*-6T	6 x 4	15	M8 x 0.75	37.5 (38.5)	9 (10)	14 (15)	15	8.5	10	10	2	12
VSP-A 20R(A)*-6T	6 x 4	20	M12 x 1	44 (45)	10 (11)	16 (17)	18	7	14	12	4	30
VSP-A 25R(A)*-6T	6 x 4	25	M12 x 1	45 (46)	11 (12)	17 (18)	18	7	14	12	4	30.5
VSP-A 30R(A)*-6T	6 x 4	30	M12 x 1	45 (48)	11 (14)	17 (20)	18	7	14	12	4	32.5
VSP-A 40R(A)*-6T	6 x 4	40	M12 x 1	48 (51.5)	14 (17.5)	20 (23.5)	18	7	14	12	4	39.5 (40.5)
VSP-A 50R(A)*-6T	6 x 4	50	M12 x 1	49 (52)	15 (18)	21 (24)	18	7	14	12	4	45.5 (47)

Note 1: Values in ( ) are for deep pad dimensions.
Note 2: The pad rubber material is indicated in * of the dimensions table. Refer to page 260 for details on the pad rubber material.

Dimensions (fixed type, side vacuum outlet VSP-B, push-in joint type)

● VSP-B1R*

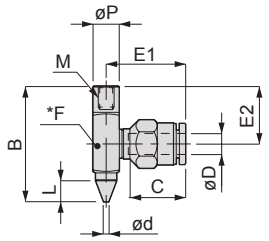

● VSP-B2 to 4R*

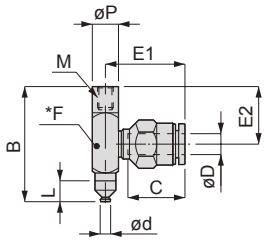

● VSP-B6/8R*

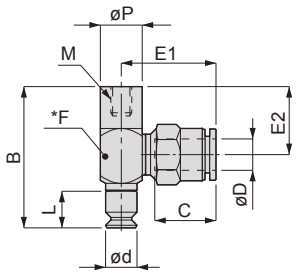

● VSP-B10R*

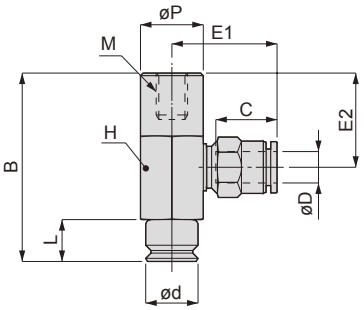

● VSP-B15 to 50R (A)*

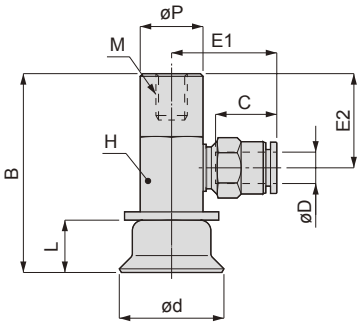

● VSP-B60 to 200R*

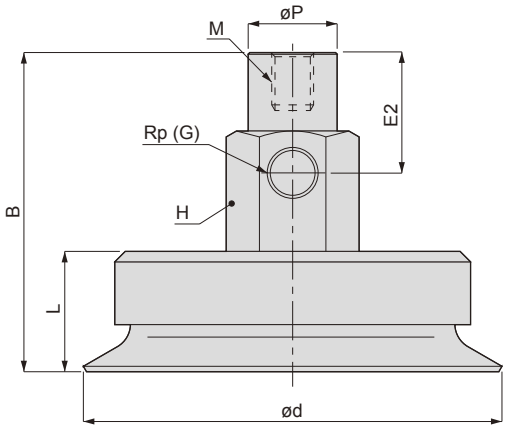

Unit: mm

Model No.	Tube O.D. øD	Pad diameter ød	Rp (G)	Set screw M	B	L	øP	C	E1	E2	Opposite side H	*F	Weight (g)
VSP-B 1R*-4	4	1	-	M3 x 0.5	22	4	5	11.2	15.5	11	-	5	5.5
VSP-B 2R*-4	4	2	-	M3 x 0.5	22	4	5	11.2	15.5	11	-	5	5.5
VSP-B 3R*-4	4	3	-	M3 x 0.5	22	4	5	11.2	15.5	11	-	5	5.5
VSP-B 4R*-4	4	4	-	M3 x 0.5	22	4	5	11.2	15.5	11	-	5	5.5
VSP-B 6R*-6	6	6	-	M4 x 0.7	27	7	8	11.9	18.3	13	-	8	13
VSP-B 8R*-6	6	8	-	M4 x 0.7	25.5	5.5	8	11.9	18.3	13	-	8	13
VSP-B 10R*-6	6	10	-	M6 x 1	36	8	12	11.9	20.3	18	12	-	30
VSP-B 15R(A)*-6	6	15	-	M6 x 1	37 (38)	9 (10)	12	11.9	20.3	18	12	-	30.5
VSP-B 20R(A)*-6	6	20	-	M6 x 1	38 (39)	10 (11)	12	11.9	20.3	18	12	-	34
VSP-B 25R(A)*-6	6	25	-	M6 x 1	39 (40)	11 (12)	12	11.9	20.3	18	12	-	34.5
VSP-B 30R(A)*-6	6	30	-	M6 x 1	39 (42)	11 (14)	12	11.9	20.3	18	12	-	36.5
VSP-B 40R(A)*-6	6	40	-	M6 x 1	42 (45.5)	14 (17.5)	12	11.9	20.3	18	12	-	43.5 (44.5)
VSP-B 50R(A)*-6	6	50	-	M6 x 1	43 (46)	15 (18)	13.5	11.9	20.3	18	12	-	49.5 (51)
VSP-B 60R(A)*-6A	-	60	1/8	M8 x 1.25	58.6 (65.6)	18 (25)	17	-	-	23	22	-	139.5 (139)
VSP-B 80R(A)*-6A	-	80	1/8	M8 x 1.25	61 (71)	23 (33)	17	-	-	23	22	-	223.5 (232)
VSP-B 100R(A)*-6A	-	100	1/8	M8 x 1.25	63 (72)	25 (34)	17	-	-	23	22	-	313 (319)
VSP-B 150R(A)*-8A	-	150	1/4	M16 x 2	110	45	26	-	-	40	30	-	994.5
VSP-B 200R(A)*-8A	-	200	1/4	M16 x 2	115	50	26	-	-	40	30	-	1474

Note 1: Values in ( ) are for deep pad dimensions.
Note 2: The pad rubber material is indicated in * of the dimensions table. Refer to page 260 for details on the pad rubber material.

Dimensions (fixed type, side vacuum outlet VSP-B, barbed joint type)

● VSP-B1R*

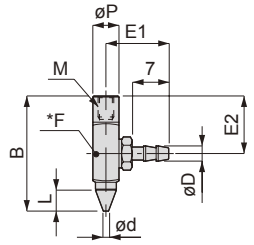

● VSP-B2 to 4R*

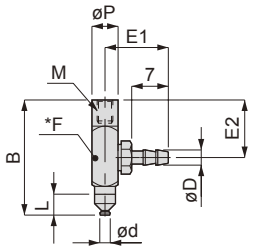

● VSP-B6/8R*

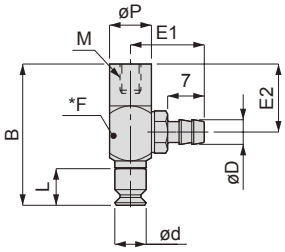

● VSP-B10R*

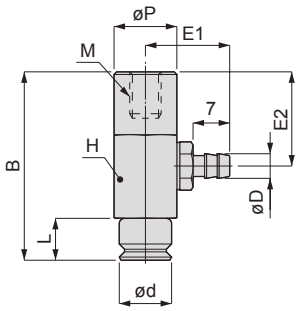

● VSP-B15 to 50R (A)*

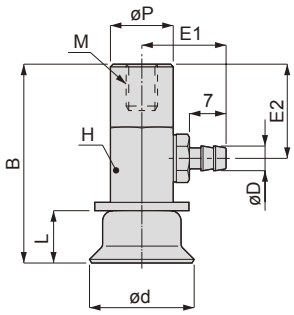

Unit: mm

Model No.	Tube O.D. x I.D. øD	Pad diameter ød	M	B	L	øP	E1	E2	Opposite side H	*F	Weight (g)
VSP-B 1R*-4T	4 x 2.5	1	M3 x 0.5	22	4	5	12	11	-	5	4
VSP-B 2R*-4T	4 x 2.5	2	M3 x 0.5	22	4	5	12	11	-	5	4
VSP-B 3R*-4T	4 x 2.5	3	M3 x 0.5	22	4	5	12	11	-	5	4
VSP-B 4R*-4T	4 x 2.5	4	M3 x 0.5	22	4	5	12	11	-	5	4
VSP-B 6R*-6T	6 x 4	6	M4 x 0.7	27	7	8	14	13	-	8	11
VSP-B 8R*-6T	6 x 4	8	M4 x 0.7	25.5	5.5	8	14	13	-	8	11
VSP-B 10R*-6T	6 x 4	10	M6 x 1	36	8	12	16	18	12	-	28.5
VSP-B 15R(A)*-6T	6 x 4	15	M6 x 1	37 (38)	9 (10)	12	16	18	12	-	29
VSP-B 20R(A)*-6T	6 x 4	20	M6 x 1	38 (39)	10 (11)	12	16	18	12	-	32
VSP-B 25R(A)*-6T	6 x 4	25	M6 x 1	39 (40)	11 (12)	12	16	18	12	-	32.5
VSP-B 30R(A)*-6T	6 x 4	30	M6 x 1	39 (42)	11 (14)	12	16	18	12	-	34.5
VSP-B 40R(A)*-6T	6 x 4	40	M6 x 1	42 (45.5)	14 (17.5)	12	16	18	12	-	41.5 (42.5)
VSP-B 50R(A)*-6T	6 x 4	50	M6 x 1	43 (46)	15 (18)	13.5	16	18	12	-	47.5 (49)

Note 1: Values in ( ) are for deep pad dimensions.
Note 2: The pad rubber material is indicated in * of the dimensions table. Refer to page 260 for details on the pad rubber material.

Dimensions (with buffer, top vacuum outlet VSP-C, push-in joint type)

● VSP-C1R*

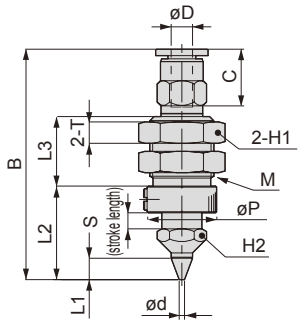

● VSP-C2 to 4R*

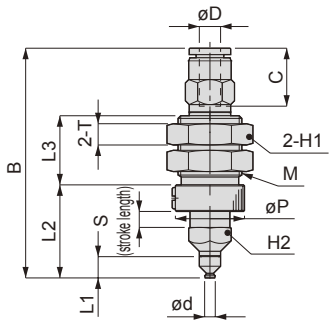

● VSP-C6/8R*

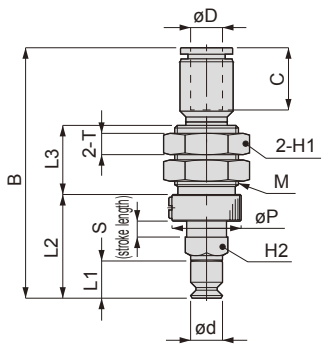

● VSP-C10R*

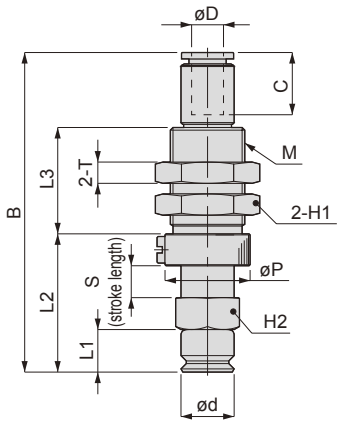

● VSP-C15 to 50R (A)*

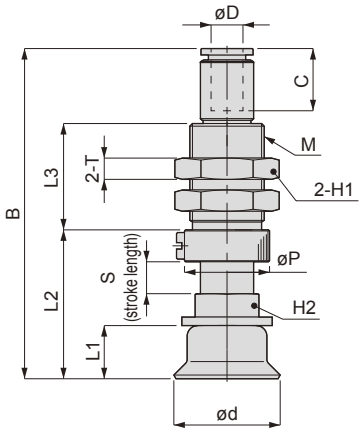

● VSP-C60 to 200R*

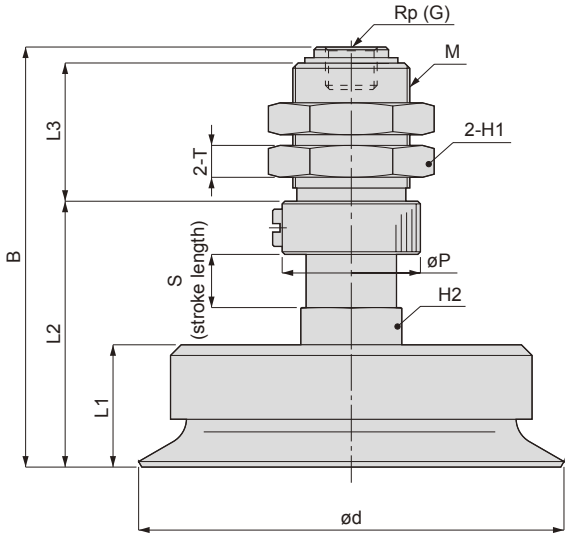

Unit: mm

Model No.	Tube O.D. øD	Pad diameter ød	Rp (G)	Set screw M	B	L1	L2	L3	øP	C	Stroke length S	Opposite side H1	Opposite side H2	T	Spring force (N)	Weight (g)
VSP-C 1R*-4	4	1	-	M12 x 1	43.5	4	17.5	13	13	11.2	3	14	8	4	1 to 2	17
VSP-C 2R*-4	4	2	-	M12 x 1	43.5	4	17.5	13	13	11.2	3	14	8	4	1 to 2	17
VSP-C 3R*-4	4	3	-	M12 x 1	43.5	4	17.5	13	13	11.2	3	14	8	4	1 to 2	17
VSP-C 4R*-4	4	4	-	M12 x 1	43.5	4	17.5	13	13	11.2	3	14	8	4	1 to 2	17
VSP-C 6R*-6	6	6	-	M12 x 1	47.3	7	19.5	13	13	11.9	3	14	8	4	1 to 2	18.5
VSP-C 8R*-6	6	8	-	M12 x 1	45.8	5.5	18	13	13	11.9	3	14	8	4	1 to 2	18.5
VSP-C 10R*-6	6	10	-	M14 x 1	60.3	8	26	20	16	11.9	6	17	12	4	5 to 7	35.5
VSP-C 15R(A)*-6	6	15	-	M14 x 1	61.3 (62.3)	9 (10)	27 (28)	20	16	11.9	6	17	12	4	5 to 7	36
VSP-C 20R(A)*-6	6	20	-	M14 x 1	62.3 (63.3)	10 (11)	28 (29)	20	16	11.9	6	17	12	4	8 to 12	39.5
VSP-C 25R(A)*-6	6	25	-	M14 x 1	63.3 (64.3)	11 (12)	29 (30)	20	16	11.9	6	17	12	4	8 to 12	40
VSP-C 30R(A)*-6	6	30	-	M14 x 1	63.3 (66.3)	11 (14)	29 (32)	20	16	11.9	6	17	12	4	8 to 12	42.5
VSP-C 40R(A)*-6	6	40	-	M14 x 1	66.3 (69.8)	14 (17.5)	32 (35.5)	20	16	11.9	6	17	12	4	8 to 12	49.5 (50.5)
VSP-C 50R(A)*-6	6	50	-	M14 x 1	67.3 (70.3)	15 (18)	33 (36)	20	16	11.9	6	17	12	4	8 to 12	55 (56.5)
VSP-C 60R(A)*-6A	-	60	1/8	M22 x 1	76.5 (83.5)	18 (25)	47.5 (54.5)	26	26	-	10	27	19	6	12 to 15	161 (160.5)
VSP-C 80R(A)*-6A	-	80	1/8	M22 x 1	79 (89)	23 (33)	50 (60)	26	26	-	10	27	19	6	12 to 15	245 (253.5)
VSP-C 100R(A)*-6A	-	100	1/8	M22 x 1	81 (90)	25 (34)	52 (61)	26	26	-	10	27	19	6	12 to 15	334.5 (340.5)
VSP-C 150R(A)*-8A	-	150	1/4	M30 x 2	164	45	72	48	35	-	20	36	30	10	12 to 22	1195.5
VSP-C 200R(A)*-8A	-	200	1/4	M30 x 2	169	50	77	48	35	-	20	36	30	10	12 to 22	1675

Note 1: Values in ( ) are for deep pad dimensions.
Note 2: The pad rubber material is indicated in * of the dimensions table. Refer to page 260 for details on the pad rubber material.

Dimensions (with buffer, top vacuum outlet VSP-C, barbed joint type)

● VSP-C1R*

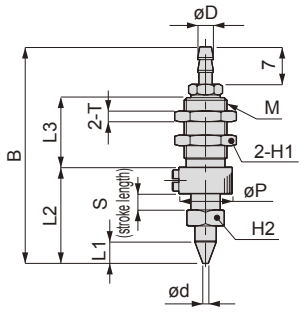

● VSP-C2 to 4R*

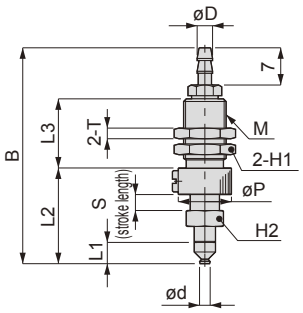

● VSP-C6/8R*

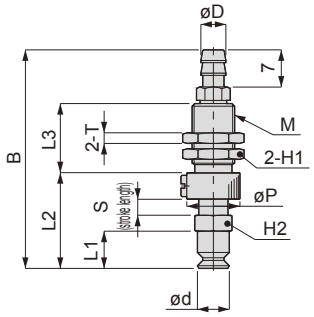

● VSP-C10R*

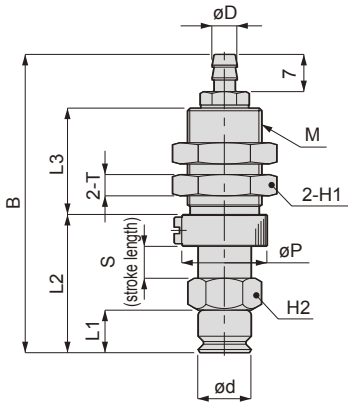

● VSP-C15 to 50R (A)*

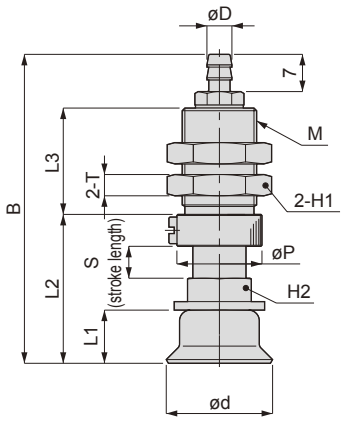

Unit: mm

Model No.	Tube O.D. x I.D. øD	Pad diameter ød	Set screw M	B	L1	L2	L3	øP	Stroke length S	Opposite side H1	Opposite side H2	T	Spring force (N)	Weight (g)
VSP-C 1R*-4T	4 x 2.5	1	M8 x 0.75	40.5	4	18	13	10	3	10	7	2	1 to 2	8
VSP-C 2R*-4T	4 x 2.5	2	M8 x 0.75	40.5	4	18	13	10	3	10	7	2	1 to 2	8
VSP-C 3R*-4T	4 x 2.5	3	M8 x 0.75	40.5	4	18	13	10	3	10	7	2	1 to 2	8
VSP-C 4R*-4T	4 x 2.5	4	M8 x 0.75	40.5	4	18	13	10	3	10	7	2	1 to 2	8
VSP-C 6R*-6T	6 x 4	6	M8 x 0.75	41	7	18	13	10	3	10	7	2	1 to 2	8.5
VSP-C 8R*-6T	6 x 4	8	M8 x 0.75	39.5	5.5	16.5	13	10	3	10	7	2	1 to 2	8.5
VSP-C 10R*-6T	6 x 4	10	M14 x 1	56.1	8	26	20	16	6	17	12	4	5 to 7	33.5
VSP-C 15R(A)*-6T	6 x 4	15	M14 x 1	57.1 (58)	9 (10)	27 (28)	20	16	6	17	12	4	5 to 7	34
VSP-C 20R(A)*-6T	6 x 4	20	M14 x 1	58.1 (59)	10 (11)	28 (29)	20	16	6	17	12	4	8 to 12	37.5
VSP-C 25R(A)*-6T	6 x 4	25	M14 x 1	59.1 (60)	11 (12)	29 (30)	20	16	6	17	12	4	8 to 12	38
VSP-C 30R(A)*-6T	6 x 4	30	M14 x 1	59.1 (62)	11 (14)	29 (32)	20	16	6	17	12	4	8 to 12	40
VSP-C 40R(A)*-6T	6 x 4	40	M14 x 1	62.1 (65.5)	14 (17.5)	32 (35.5)	20	16	6	17	12	4	8 to 12	47 (48)
VSP-C 50R(A)*-6T	6 x 4	50	M14 x 1	63.1 (66)	15 (18)	33 (36)	20	16	6	17	12	4	8 to 12	53 (54.5)

Note 1: Values in ( ) are for deep pad dimensions.
Note 2: The pad rubber material is indicated in * of the dimensions table. Refer to page 260 for details on the pad rubber material.

Dimensions (with buffer, side vacuum outlet VSP-D, push-in joint type)

● VSP-D1R*

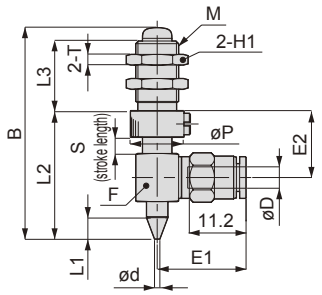

● VSP-D2 to 4R*

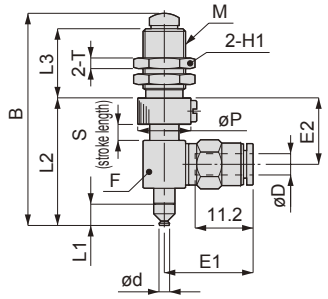

● VSP-D6/8R*

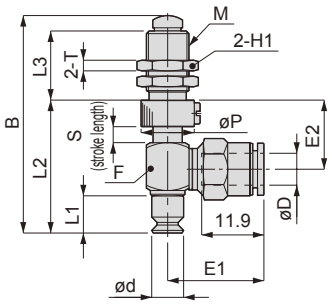

● VSP-D10R*

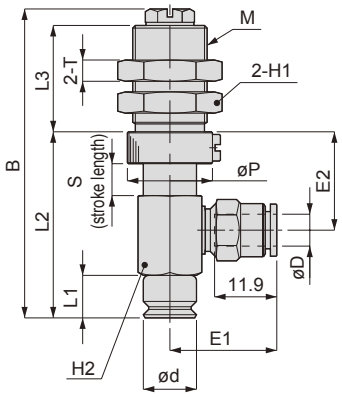

● VSP-D15 to 50R (A)*

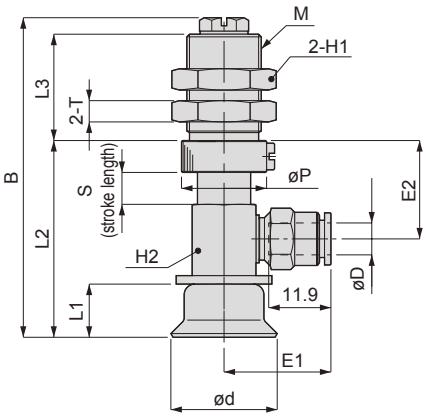

● VSP-D60 to 200R*

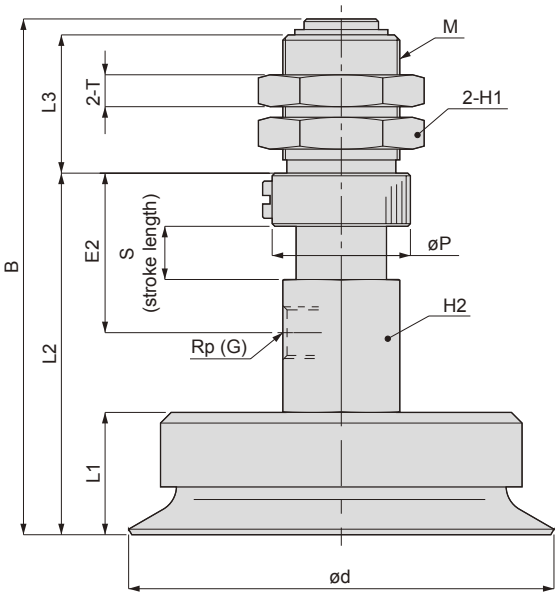

Unit: mm

Model No.	Tube O.D. øD	Pad diameter ød	Rp (G)	Set screw M	B	L1	L2	L3	øP	Stroke length S	E1	E2	Opposite side H1	Opposite side H2 of F	T	Spring force (N)	Weight (g)
VSP-D 1R*-4	4	1	-	M8 x 0.75	40	4	24	13	13	3	17	12.5	10	*8	2	1 to 2	13.5
VSP-D 2R*-4	4	2	-	M8 x 0.75	40	4	24	13	13	3	17	12.5	10	*8	2	1 to 2	13.5
VSP-D 3R*-4	4	3	-	M8 x 0.75	40	4	24	13	13	3	17	12.5	10	*8	2	1 to 2	13.5
VSP-D 4R*-4	4	4	-	M8 x 0.75	40	4	24	13	13	3	17	12.5	10	*8	2	1 to 2	13.5
VSP-D 6R*-6	6	6	-	M8 x 0.75	41	7	27	13	13	3	18.3	13	10	*8	2	1 to 2	15.5
VSP-D 8R*-6	6	8	-	M8 x 0.75	39.5	5.5	23.5	13	13	3	18.3	13	10	*8	2	1 to 2	15.5
VSP-D 10R*-6	6	10	-	M14 x 1	58.1	8	35	20	16	6	20.3	18.5	17	12	4	5 to 7	47.5
VSP-D 15R(A)*-6	6	15	-	M14 x 1	59.1 (60.1)	9 (10)	36 (37)	20	16	6	20.3	18.5	17	12	4	5 to 7	48
VSP-D 20R(A)*-6	6	20	-	M14 x 1	60.1 (61.1)	10 (11)	37 (38)	20	16	6	20.3	18.5	17	12	4	8 to 12	51.5
VSP-D 25R(A)*-6	6	25	-	M14 x 1	61.1 (62.1)	11 (12)	38 (39)	20	16	6	20.3	18.5	17	12	4	8 to 12	52
VSP-D 30R(A)*-6	6	30	-	M14 x 1	61.1 (64.1)	11 (14)	38 (41)	20	16	6	20.3	18.5	17	12	4	8 to 12	54
VSP-D 40R(A)*-6	6	40	-	M14 x 1	64.1 (67.6)	14 (17.5)	41 (44.5)	20	16	6	20.3	18.5	17	12	4	8 to 12	61 (62)
VSP-D 50R(A)*-6	6	50	-	M14 x 1	65.1 (68.1)	15 (18)	42 (45)	20	16	6	20.3	18.5	17	12	4	8 to 12	67 (68.5)
VSP-D 60R(A)*-6A	-	60	1/8	M22 x 1	94.6 (101.6)	18 (25)	65.5 (72.5)	26	26	10	-	30	27	22	6	12 to 15	243.5 (243)
VSP-D 80R(A)*-6A	-	80	1/8	M22 x 1	97 (107)	23 (33)	68 (78)	26	26	10	-	30	27	22	6	12 to 15	327.5 (336)
VSP-D 100R(A)*-6A	-	100	1/8	M22 x 1	99 (108)	25 (34)	70 (79)	26	26	10	-	30	27	22	6	12 to 15	417 (423)
VSP-D 150R(A)*-8A	-	150	1/4	M30 x 2	164	45	112	48	35	20	-	42	36	30	10	12 to 22	1195.5
VSP-D 200R(A)*-8A	-	200	1/4	M30 x 2	169	50	117	48	35	20	-	42	36	30	10	12 to 22	1675

Note 1: Values in ( ) are for deep pad dimensions.
Note 2: The pad rubber material is indicated in * of the dimensions table. Refer to page 260 for details on the pad rubber material.

Dimensions (with buffer, side vacuum outlet VSP-D, barbed joint type)

● VSP-D1R*

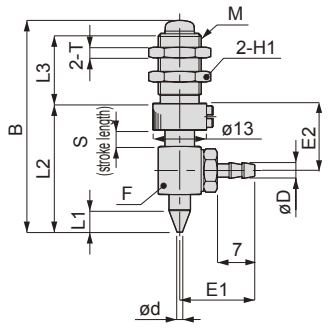

● VSP-D2 to 4R*

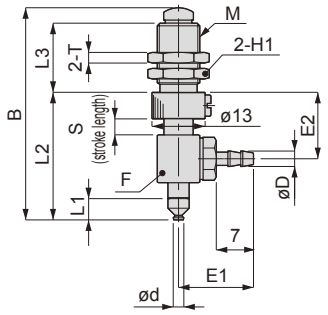

● VSP-D6/8R*

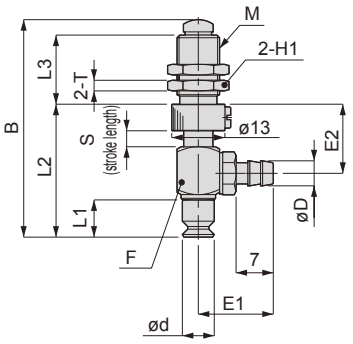

● VSP-D10R*

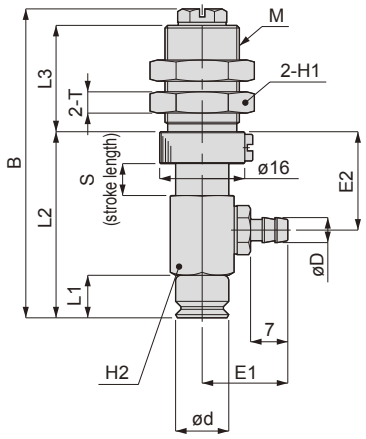

● VSP-D15 to 50R (A)*

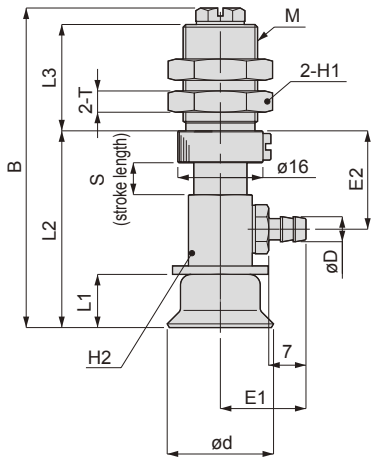

Unit: mm

Model No.	Tube O.D. x I.D. øD	Pad diameter ød	Set screw M	B	L1	L2	L3	Stroke length S	E1	E2	Opposite side H1	Opposite side H2 of F	T	Spring force (N)	Weight (g)
VSP-D 1R*-4T	4 x 2.5	1	M8 x 0.75	40	4	24	13	3	14	12.5	10	*8	2	1 to 2	11.5
VSP-D 2R*-4T	4 x 2.5	2	M8 x 0.75	40	4	24	13	3	14	12.5	10	*8	2	1 to 2	11.5
VSP-D 3R*-4T	4 x 2.5	3	M8 x 0.75	40	4	24	13	3	14	12.5	10	*8	2	1 to 2	11.5
VSP-D 4R*-4T	4 x 2.5	4	M8 x 0.75	40	4	24	13	3	14	12.5	10	*8	2	1 to 2	11.5
VSP-D 6R*-6T	6 x 4	6	M8 x 0.75	41	7	27	13	3	14	13	10	*8	2	1 to 2	12.5
VSP-D 8R*-6T	6 x 4	8	M8 x 0.75	39.5	5.5	23.5	13	3	14	13	10	*8	2	1 to 2	12.5
VSP-D 10R*-6T	6 x 4	10	M14 x 1	58	8	35	20	6	16	18.5	17	12	4	5 to 7	45.5
VSP-D 15R(A)*-6T	6 x 4	15	M14 x 1	59 (60)	9 (10)	36 (37)	20	6	16	18.5	17	12	4	5 to 7	46
VSP-D 20R(A)*-6T	6 x 4	20	M14 x 1	60 (61)	10 (11)	37 (38)	20	6	16	18.5	17	12	4	8 to 12	49
VSP-D 25R(A)*-6T	6 x 4	25	M14 x 1	61 (62)	11 (12)	38 (39)	20	6	16	18.5	17	12	4	8 to 12	49.5
VSP-D 30R(A)*-6T	6 x 4	30	M14 x 1	61 (64)	11 (14)	38 (41)	20	6	16	18.5	17	12	4	8 to 12	51.5
VSP-D 40R(A)*-6T	6 x 4	40	M14 x 1	64 (67.5)	14 (17.5)	41 (44.5)	20	6	16	18.5	17	12	4	8 to 12	56 (60)
VSP-D 50R(A)*-6T	6 x 4	50	M14 x 1	65 (68)	15 (18)	42 (45)	20	6	16	18.5	17	12	4	8 to 12	64.5 (66)

Note 1: Values in ( ) are for deep pad dimensions.
Note 2: The pad rubber material is indicated in * of the dimensions table. Refer to page 260 for details on the pad rubber material.

Dimensions (directly mounted, fixed type, VSP-E, metric screw type)

● VSP-E1R*

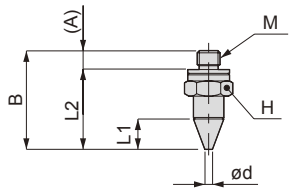

● VSP-E2 to 4R*

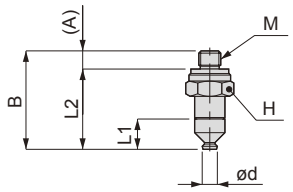

● VSP-E6/8R*

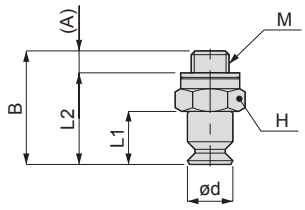

Unit: mm

Model No.	Pad diameter ød	M	A	B	L1	L2	Opposite side H	Weight (g)
VSP-E 1R*	1	M3 x 0.5	2.4	13	4	10.6	5.5	1.5
VSP-E 2R*	2	M3 x 0.5	2.4	13	4	10.6	5.5	1.5
VSP-E 3R*	3	M3 x 0.5	2.4	13	4	10.6	5.5	1.5
VSP-E 4R*	4	M3 x 0.5	2.4	13	4	10.6	5.5	1.5
VSP-E 6R*	6	M5 x 0.8	2.9	15	7	12.1	8	3
VSP-E 8R*	8	M5 x 0.8	2.9	13.5	5.5	10.6	8	3

Note 1: Dimensions given in parentheses are for the deep pad.
Note 2: The pad rubber material is indicated in * of the dimensions table. Refer to page 260 for details on the pad rubber material.

Dimensions (directly mounted, with buffer, VSP-F, metric screw type)

● VSP-F1R

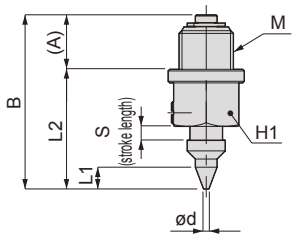

● VSP-F2 to 4R*

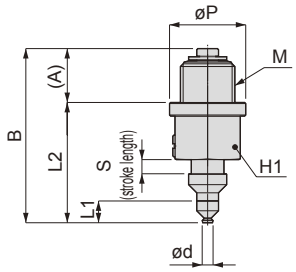

● VSP-F6/8R*

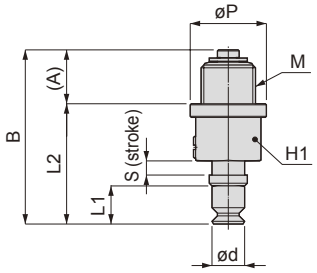

● VSP-f10R*

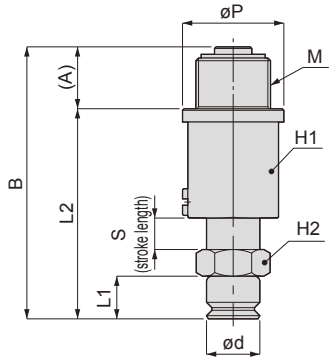

● VSP-F15 to 50R (A)*

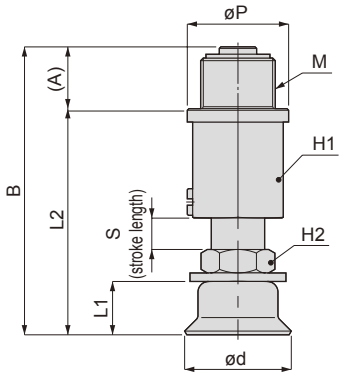

Unit: mm

Model No.	Pad diameter ød	Set screw M	A	B	L1	L2	øP	Stroke length S	Opposite side H1	Opposite side H2	Spring force (N)	Weight (g)
VSP-F 1R*	1	M10 x 1	9.5	32	4	22.5	14	2.5	12	-	3 to 4	14.5
VSP-F 2R*	2	M10 x 1	9.5	32	4	22.5	14	2.5	12	-	3 to 4	14.5
VSP-F 3R*	3	M10 x 1	9.5	32	4	22.5	14	2.5	12	-	3 to 4	14.5
VSP-F 4R*	4	M10 x 1	9.5	32	4	22.5	14	2.5	12	-	3 to 4	14.5
VSP-F 6R*	6	M10 x 1	9.5	32	7	22.5	14	2.5	12	-	3 to 4	14.5
VSP-F 8R*	8	M10 x 1	9.5	30.5	5.5	21	14	2.5	12	-	3 to 4	14.5
VSP-F 10R*	10	M14 x 1	11.6	51	8	39.3	19	6	17	12	9 to 13	55.5
VSP-F 15R(A)*	15	M14 x 1	11.6	52 (53)	9 (10)	40.3 (42.3)	19	6	17	12	9 to 13	56
VSP-F 20R(A)*	20	M14 x 1	11.6	54 (55)	10 (11)	42.3 (43.3)	19	6	17	12	9 to 13	58.5
VSP-F 25R(A)*	25	M14 x 1	11.6	55 (56)	11 (12)	43.3 (44.3)	19	6	17	12	9 to 13	59
VSP-F 30R(A)*	30	M14 x 1	11.6	55 (58)	11 (14)	43.3 (46.3)	19	6	17	12	9 to 13	61
VSP-F 40R(A)*	40	M14 x 1	11.6	58 (61.5)	14 (17.5)	46.3 (49.8)	19	6	17	12	9 to 13	68 (69)
VSP-F 50R(A)*	50	M14 x 1	11.6	59 (62)	15 (18)	47.3 (50.3)	19	6	17	12	9 to 13	74 (75.5)

Note 1: Values in ( ) are for deep pad dimensions.
Note 2: The pad rubber material is indicated in * of the dimensions table. Refer to page 260 for details on the pad rubber material.

Dimensions for only pad type (general type, non-framed type)

● VSPG-1R*

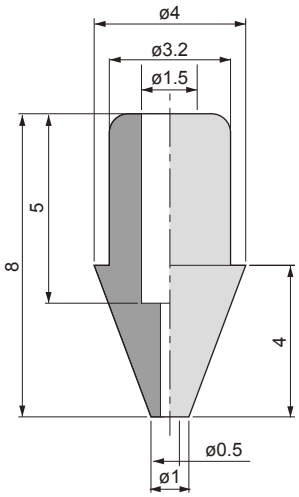

● VSPG-2R*

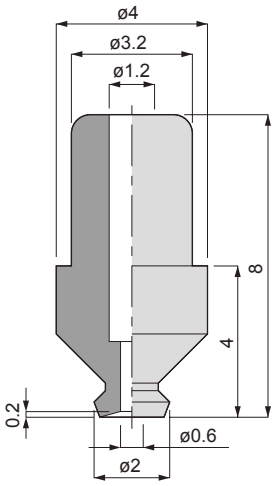

● VSPG-3R*

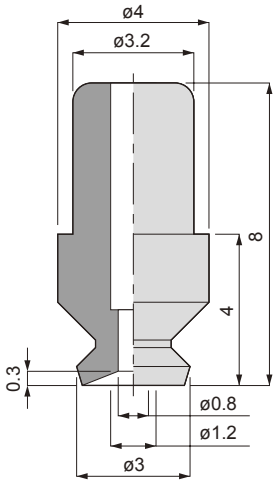

● VSPG-4R*

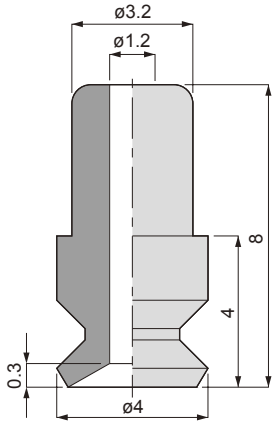

● VSPG-6R*

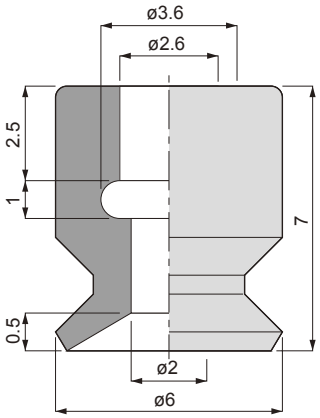

● VSPG-8R*

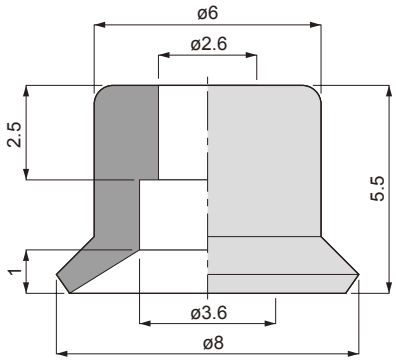

● VSPG-10R*

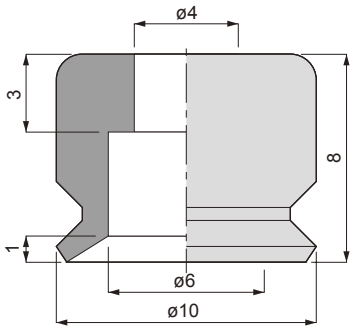

● VSPG-15R*

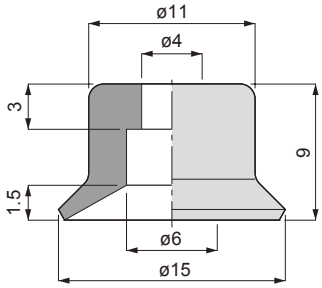

● VSPG-20P*

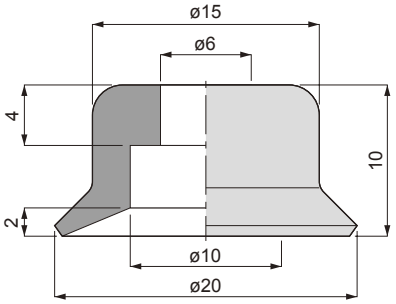

● VSPG-25R*

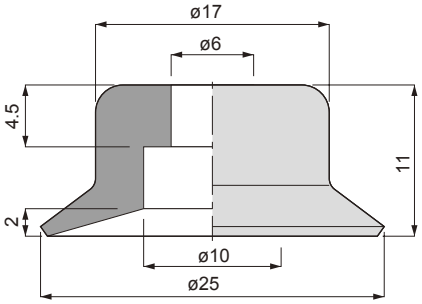

● VSPG-30R*

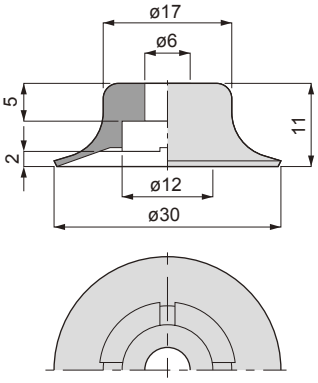

● VSPG-40R*

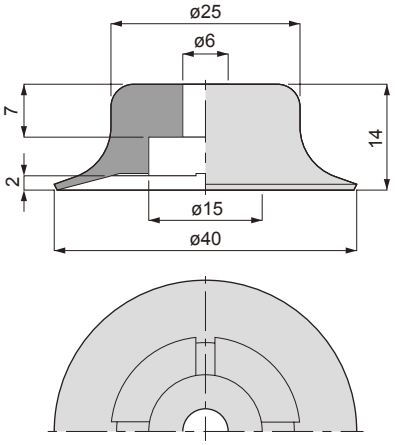

● VSPG-50R*

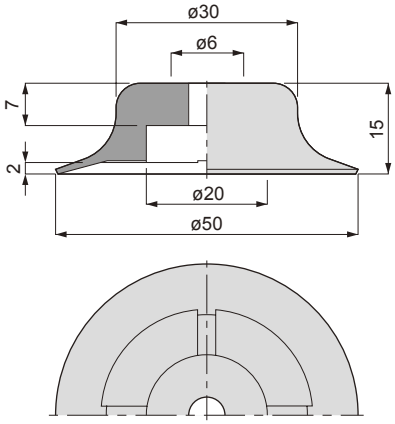

Dimensions for only pad type (general type, non-framed type)

● VSPG-60R*

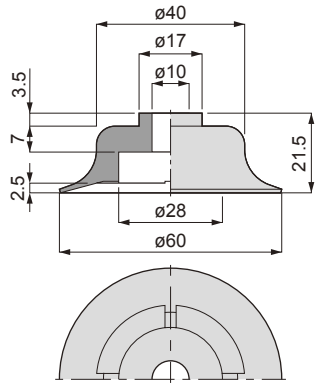

● VSPG-80R*

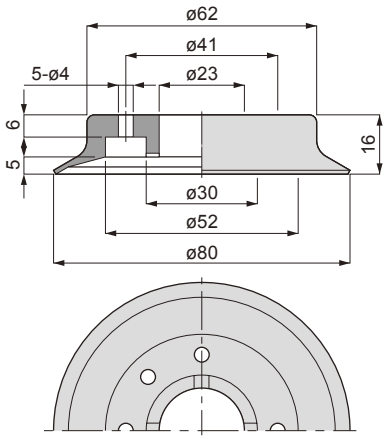

● VSPG-100R*

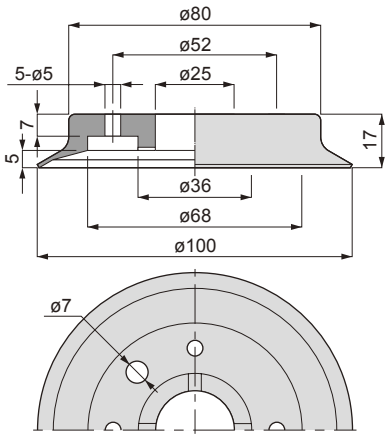

● VSPG-150R*

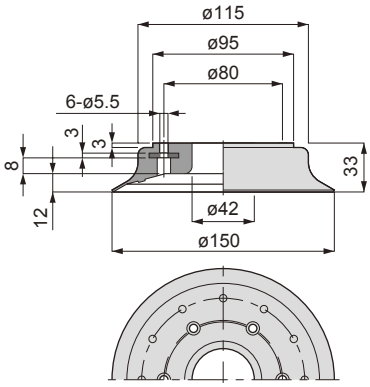

● VSPG-200R*

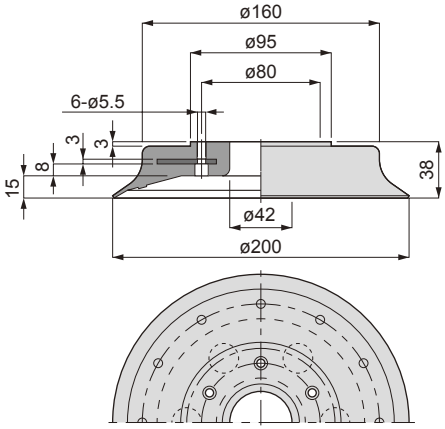

Dimensions for only pad type (general type, framed type)

● VSPG-80R*A

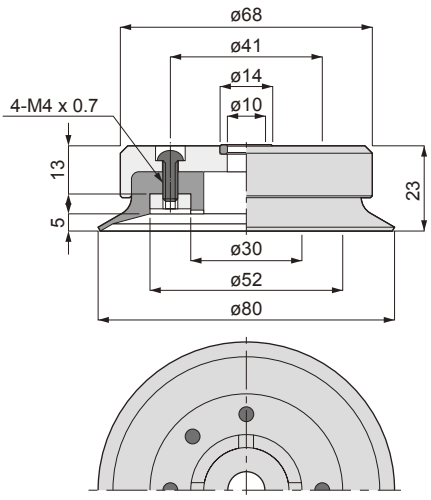

● VSPG-100R*A

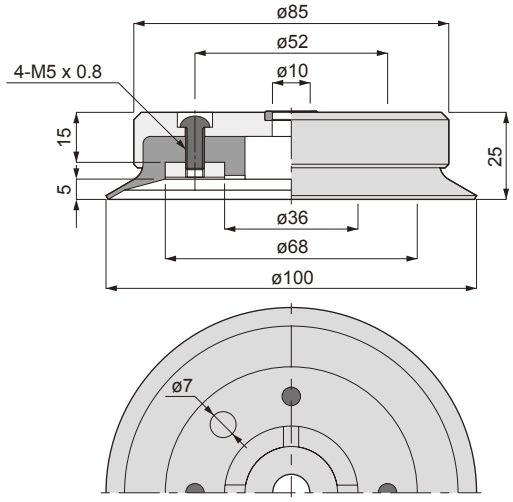

● VSPG-150R*A

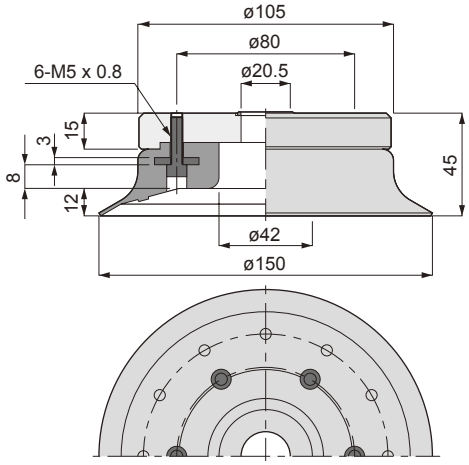

● VSPG-200R*A

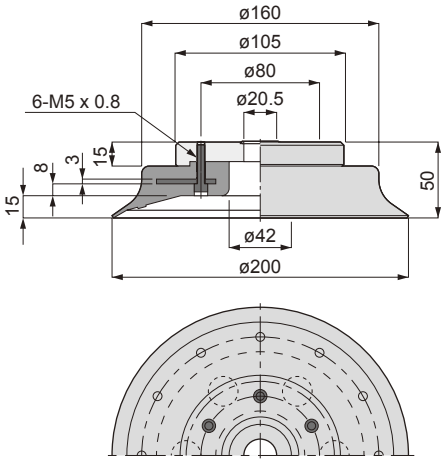

Dimensions for only pad type (deep type/non-framed type)

● VSPG-15A*

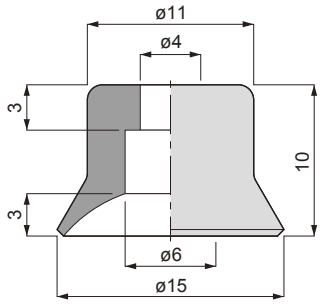

● VSPG-20A*

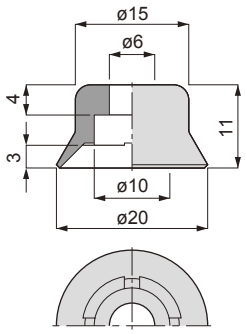

● VSPG-25A*

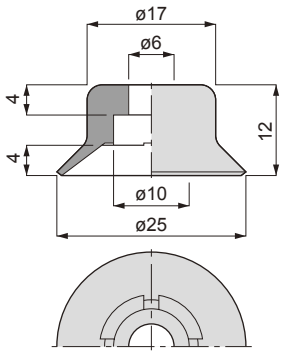

● VSPG-30A*

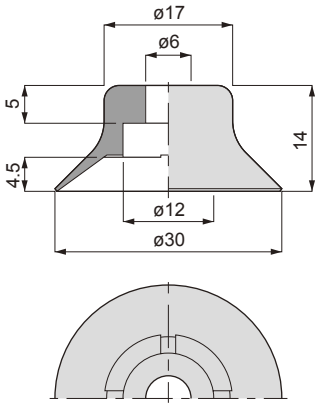

● VSPG-40A*

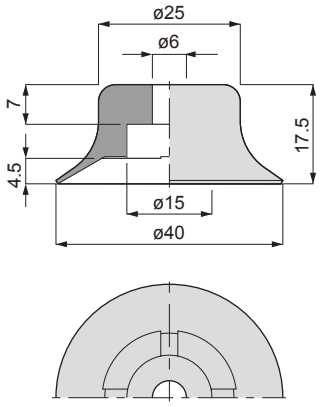

● VSPG-50A*

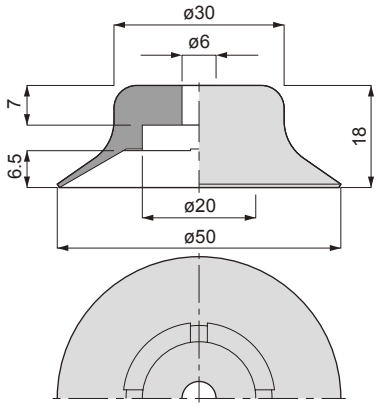

● VSPG-60A*

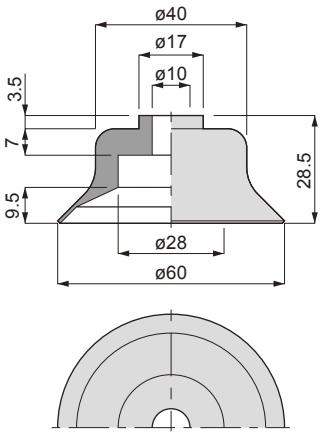

● VSPG-80A*

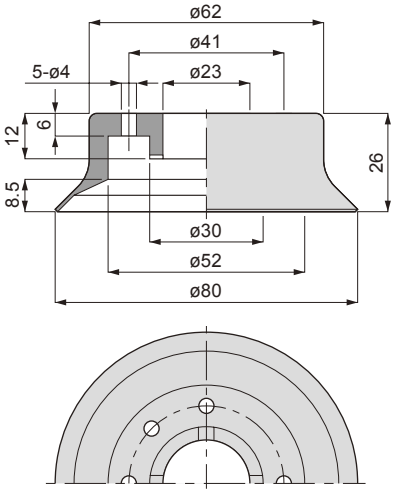

● VSPG-100A*

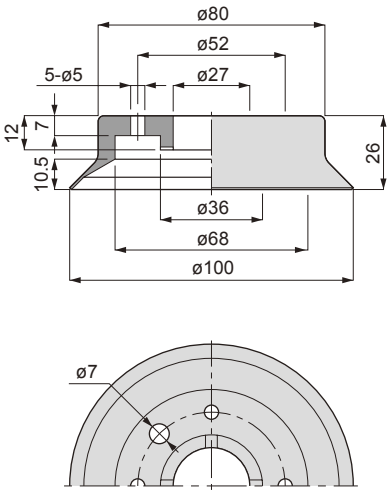

Dimensions for only pad type (deep type/framed type)

● VSPG-80A*A

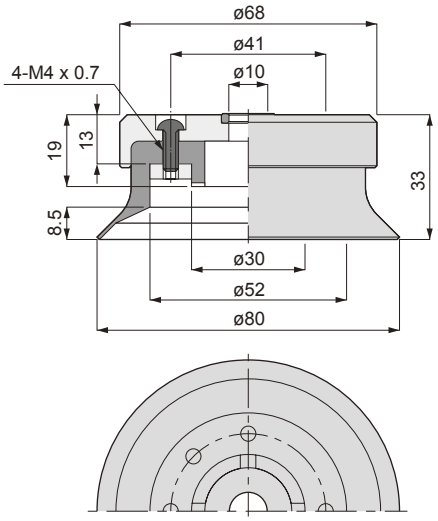

● VSPG-100A*A

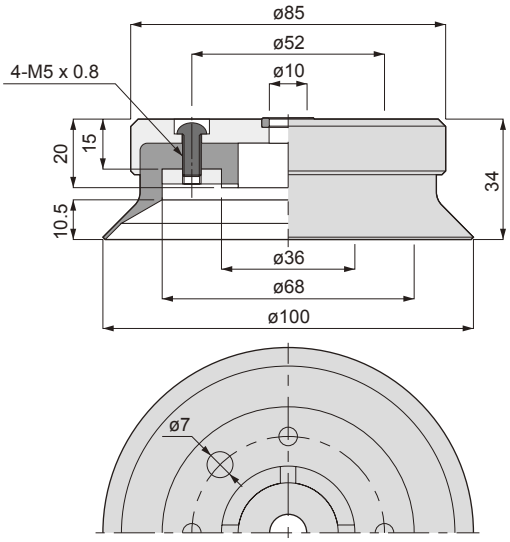

Detailed drawing of pad and holder fixing section (general type)

● VSPG-1R*

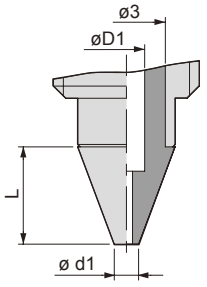

● VSPG-2 to 4R*

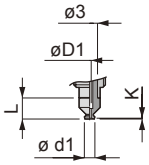

● VSPG-6/8R*

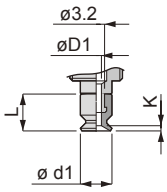

● VSPG-10/15R*

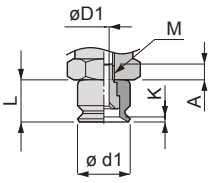

● VSPG-20 to 30R*

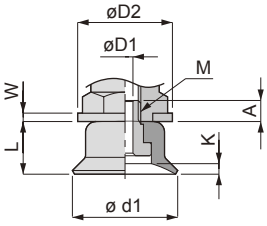

● VSPG-40/50R*

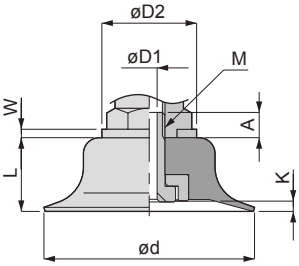

● VSPG-60R*

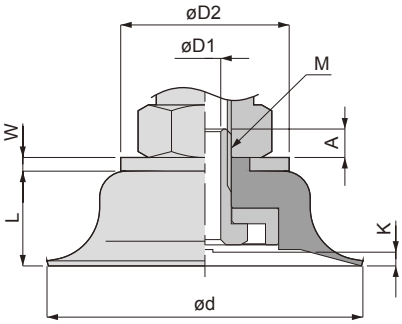

● VSPG-80/100R*A

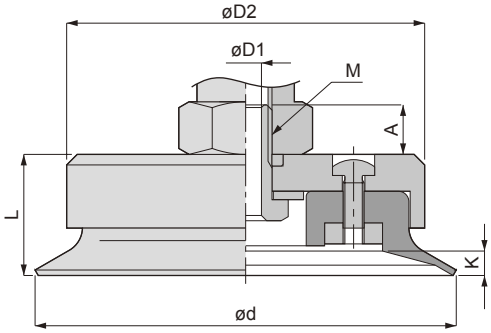

● VSPG-150/200R*A

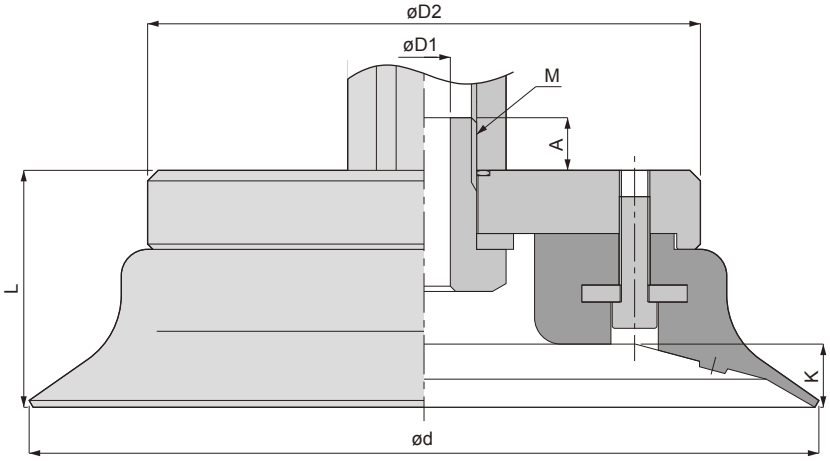

Unit: mm

Model No.	Pad diameter ød	L	Lip inner height K	Set screw M	A	øD1	øD2	W
VSPG-1R*	1	4	-	-	-	1.2	-	-
VSPG-2R*	2	4	0.2	-	-	1.2	-	-
VSPG-3R*	3	4	0.2	-	-	1.2	-	-
VSPG-4R*	4	4	0.6	-	-	1.2	-	-
VSPG-6R*	6	7	1	-	-	2	-	-
VSPG-8R*	8	5.5	1.1	-	-	2	-	-
VSPG-10R*	10	8	1	M4 x 0.7	3.5	2	-	-
VSPG-15R*	15	9	2.4	M4 x 0.7	3.5	2	-	-
VSPG-20R*	20	10	1.8	M6 x 1	4.5	3	18	1.6
VSPG-25R*	25	11	2	M6 x 1	4.5	3	18	1.6
VSPG-30R*	30	11	2	M6 x 1	5.5	3	18	1.6
VSPG-40R*	40	14	1.9	M6 x 1	5.3	3	22	1.6
VSPG-50R*	50	15	1.9	M6 x 1	5.3	3	22	1.6
VSPG-60R*	60	18	2.6	M10 x 1.5	5.4	6	32	2.6
VSPG-80R*A	80	23	4.7	M10 x 1.5	9.4	6	68	-
VSPG-100R*A	100	25	5.5	M10 x 1.5	8.4	6	85	-
VSPG-150R*A	150	45	12	M20 x 2	11	10	105	-
VSPG-200R*A	200	50	15	M20 x 2	11	10	105	-

Note 1: The pad rubber material is indicated in * of the dimensions table. Refer to page 260 for details on the pad rubber material.

Detailed drawing of pad and holder fixing section (deep type)

● VSPG-15A*

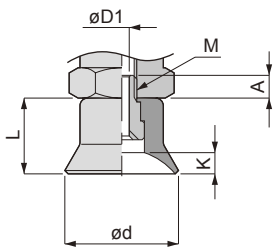

● VSPG-20 to 30A*

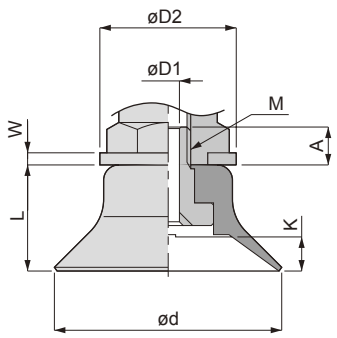

● VSPG-40, 50A*

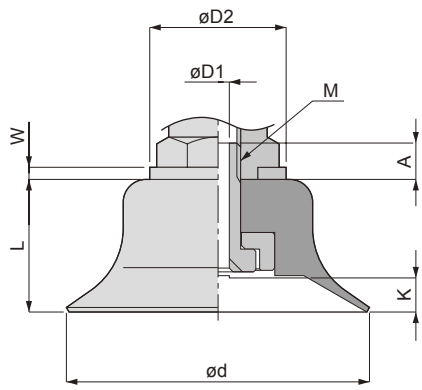

● VSPG-60A*

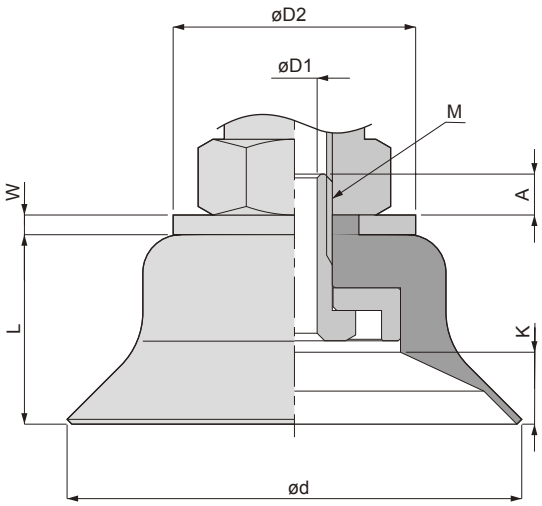

● VSPG-80, 100A*A

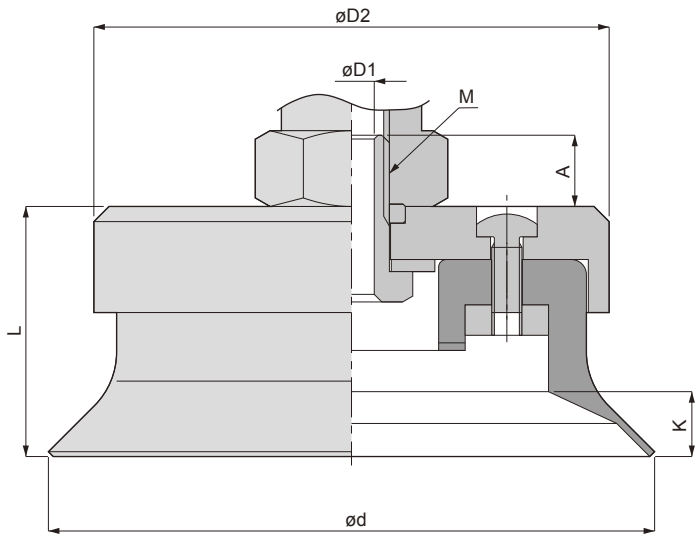

Unit: mm

Model No.	Pad diameter ød	L	Lip inner height K	Set screw M	A	øD1	øD2	W
VSPG-15A*	15	10	2.8	M4 x 0.7	3.5	2	-	-
VSPG-20A*	20	11	3	M6 x 1	4.5	3	18	1.6
VSPG-25A*	25	12	4	M6 x 1	4.5	3	18	1.6
VSPG-30A*	30	14	4.5	M6 x 1	5.5	3	18	1.6
VSPG-40A*	40	17.5	4.5	M6 x 1	5.3	3	22	1.6
VSPG-50A*	50	18	6.5	M6 x 1	5.3	3	22	1.6
VSPG-60A*	60	25	9.5	M10 x 1.5	5.4	6	32	2.6
VSPG-80A*A	80	33	8.6	M10 x 1.5	9.4	6	68	-
VSPG-100A*A	100	34	10.7	M10 x 1.5	8.4	6	85	-

Note 1: The pad rubber material is indicated in * of the dimensions table. Refer to page 260 for details on the pad rubber material.